TAURUS 200E GX

Installation Instructions

Installation Tools

1. Fastening tool
2. The hammer
3. The long nose pliers
4. The scissors
5. Cross screwdriver
6. Wrench(10mm, 12mm, 14mm, 16mm, 17mm, 19mm)
7. Sleeve head(10mm, 12mm, 14mm, 16mm, 17mm, 19mm)
8. Lengthen the connecting rod
9. Hexagon socket head (8mm)

*NOTE: THIS INSTRUCITON IS ONLY FOR AUTHORIZED OR TRAINED PROFESSIONAL MECHANIC.

Erection Sequence

1. Remove the outer packing
2. Take the packing attachment
3. Lift out the vehicle
4. Place vehicle
5. Install the front suspension
6. Install the tie rod end B
7. Install the rear shock ASSY
8. Install steering column
9. Install upper front Mudguards
10. Install the front bumper
11. Install the wheels
12. Install ROP
13. Install the roof
14. Install the head rest ASSY
15. Install the rear view mirror
16. Install back rest
17. Install belt(3 POINT)
18. Install exhaust pipe of muffler
19. Install steering wheel

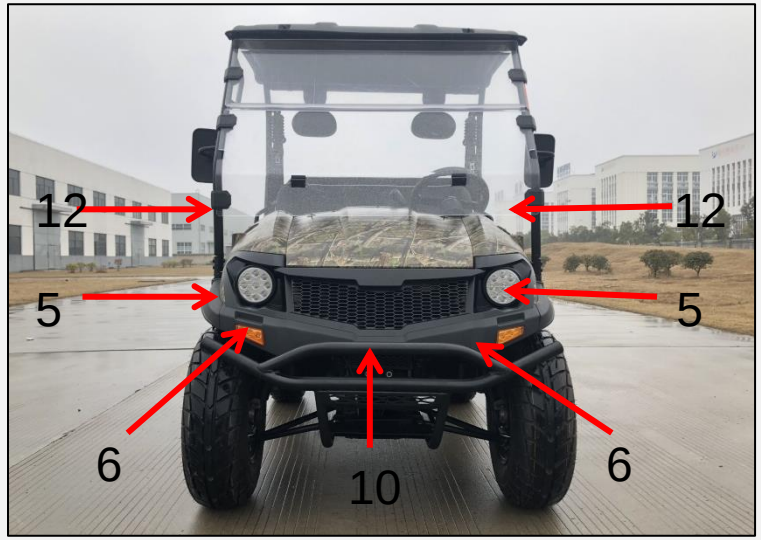

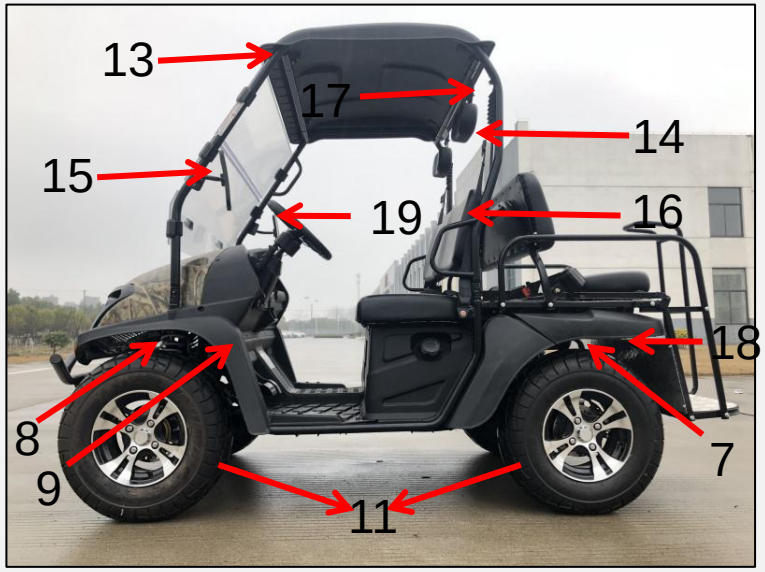

1. Remove the outer packing

Operation instructions：

1. Open the outer packing.
2. Dismantle the packaging frame bolts (32 in total)

Tools：

1. The scissors
2. Sleeve head (14mm)
3. Wrench (14mm)

Matters Need Attention：

Step 1: remove the top frame

Step 2: remove the front and rear, left and right borders

2. Take the packing attachment

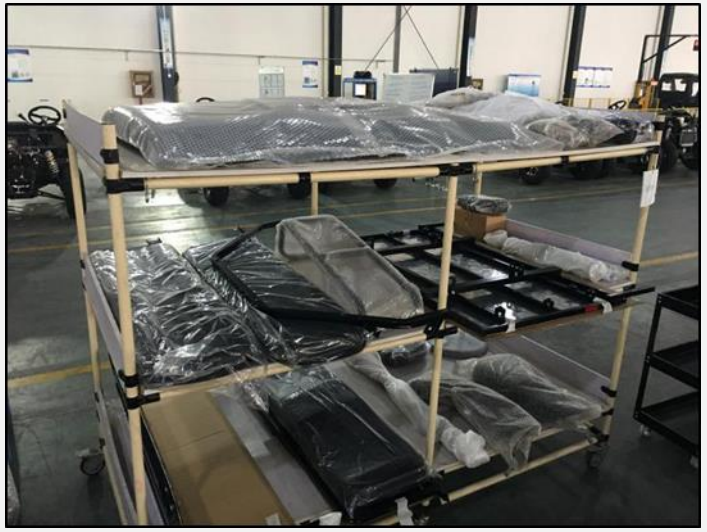

Matters Need Attention：

1. Do not scratch parts

2. Parts neatly arranged

Operation instructions：

1. Cut off the binding tape on the attachment
2. Take out the packaging attachment (20 pieces in total)

Tools：

1. The scissors

3. Lift out the vehicle

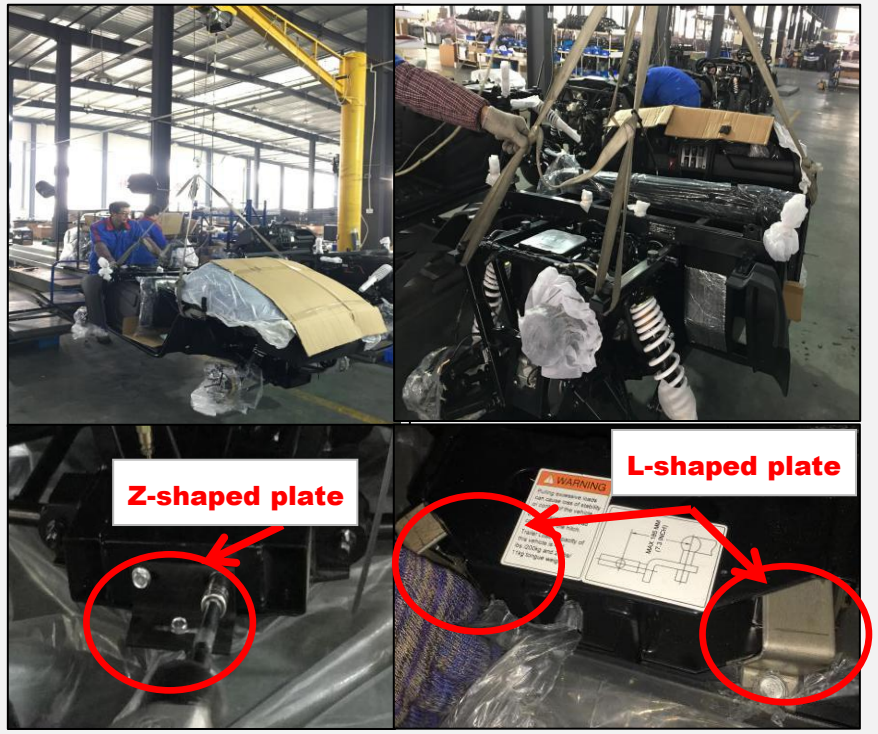

Operation instructions：

1. Remove L-shaped plate at the front of the frame and Z-shaped plate at the back of the frame
2. Tie the rope to the front and back of the frame
3. Lift out the vehicle

Tools：

1. Sleeve head (14mm)

Matters Need Attention：

1. Pay attention to personnel safety when lifting the vehicle

2. The lifting rope is fixed in the position of red circle on the frame

3. Do not overpower the removable hood.

4. Place vehicle

Operation instructions：

1. Place the vehicle on the tooling for installation

Tools：

1. Vehicles to place tooling

Matters Need Attention：

Pay attention to the location of the tooling in the center of the vehicle.

5. Install the front suspension

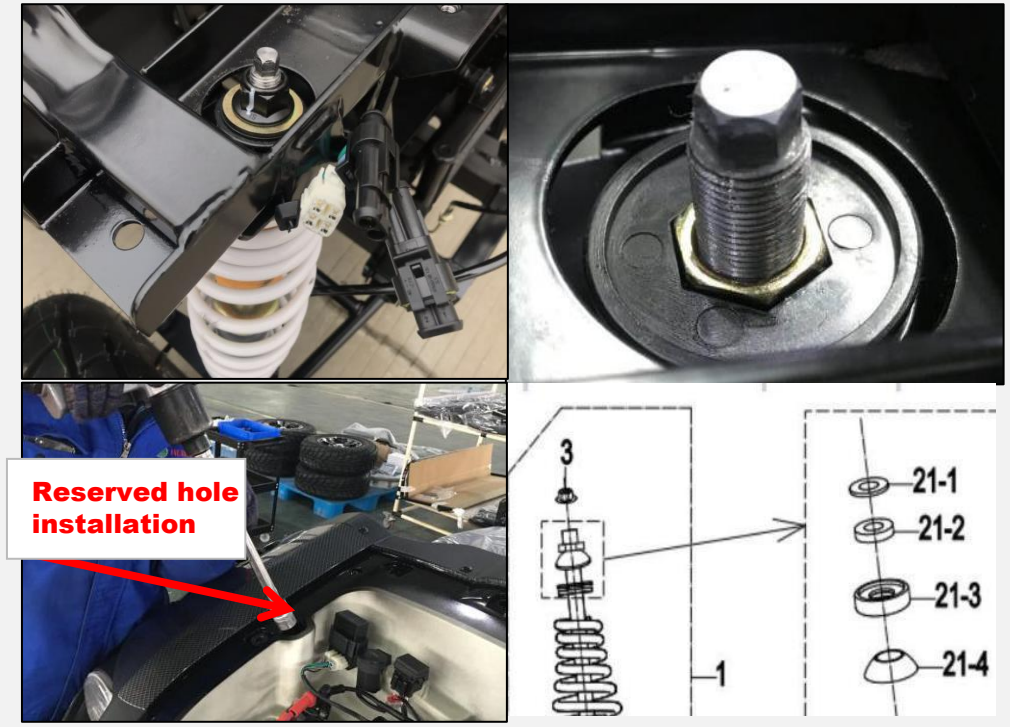

Matters Need Attention：

1. Pay attention to the ball bowl and shock installation

2. Make sure to tighten the upper teeth of the shock to 3-4 teeth

3. Install the ball bowl accessories according to the installation sequence

Operation instructions：

1. Cut off the plastic wrap on the front and rear brake disc Strap for bag and shock.

2. Remove the head attachments of the front shock strut body ASSY, apply sufficient grease to the ball bowl and frame, lift the front suspension onto the frame and place the attachment as shown, Piece nut (see attached drawing for installation sequence).

3. Install the reserved hole in the front panel and put in the extension sleeve gun head, tighten the nut.

Tools：

1. The scissors
2. Sleeve head (21mm)
3. Lengthen the connecting rod

6. Install the tie rod end B

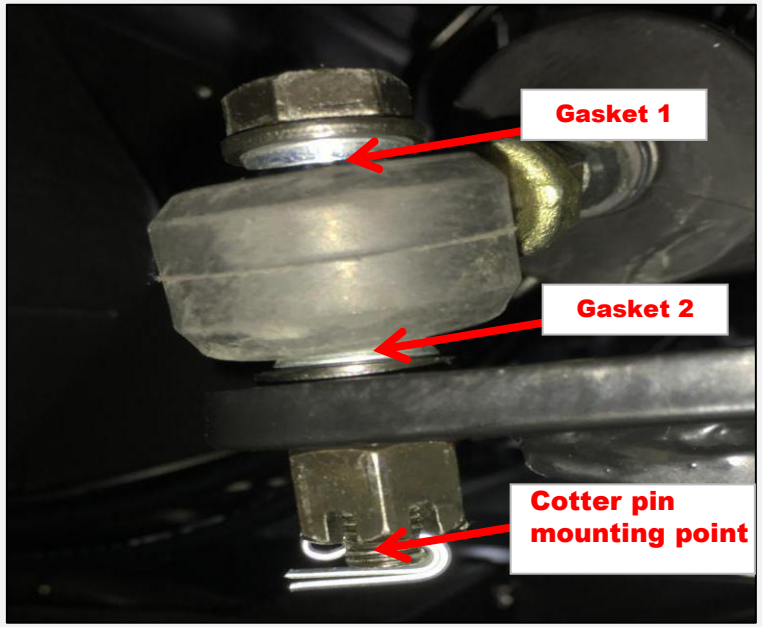

Matters Need Attention：

1. Pay attention to the mounting position of gasket

2. After fastening, note that the notch is perforated with cotter pin

3. The torque 30 ~ 40 N.m

Operation instructions：

1. Take out No. 1 standard part bag, connect the Tie Rod End B with the installation hole of shock with bolt M10×1.25×55, and install the slotted nut M10×1.25

2. Insert the cotter pin into the hole bolt

Tools：

1. Wrench (16mm)

2. Sleeve head (16mm)

7. Install the rear shock ASSY

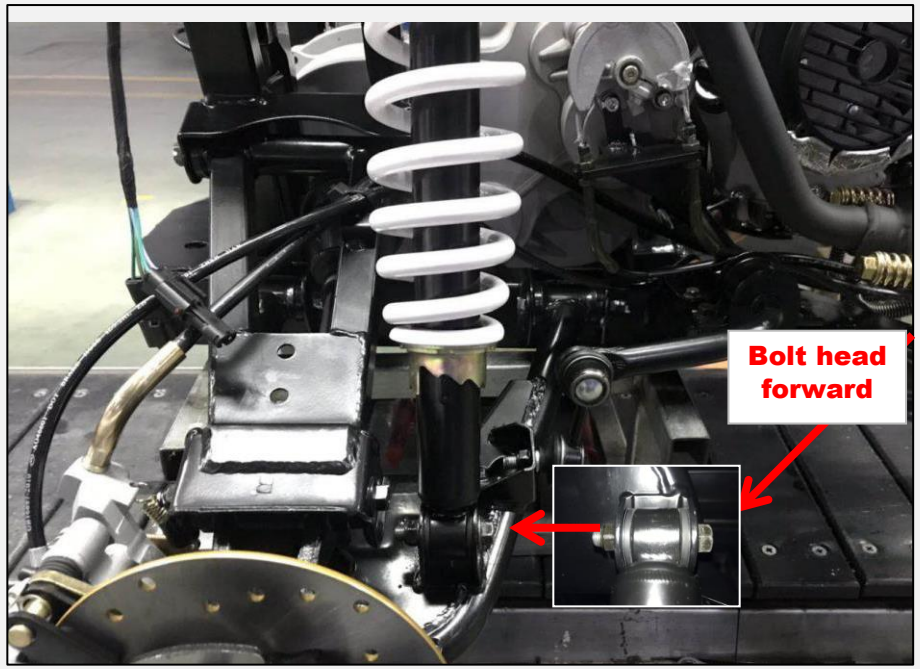

Matters Need Attention：

1. All bolt heads forward

2. The torque 30 ~ 40 N.m

Operation instructions：

Take out No.2 standard part bag, install the bolt M10×1.25×50 at the rear shock ASSY, and tighten it with the nut M10×1.25.

Tools：

1. Wrench (14mm)
2. Sleeve head (14mm)

8. Install steering column

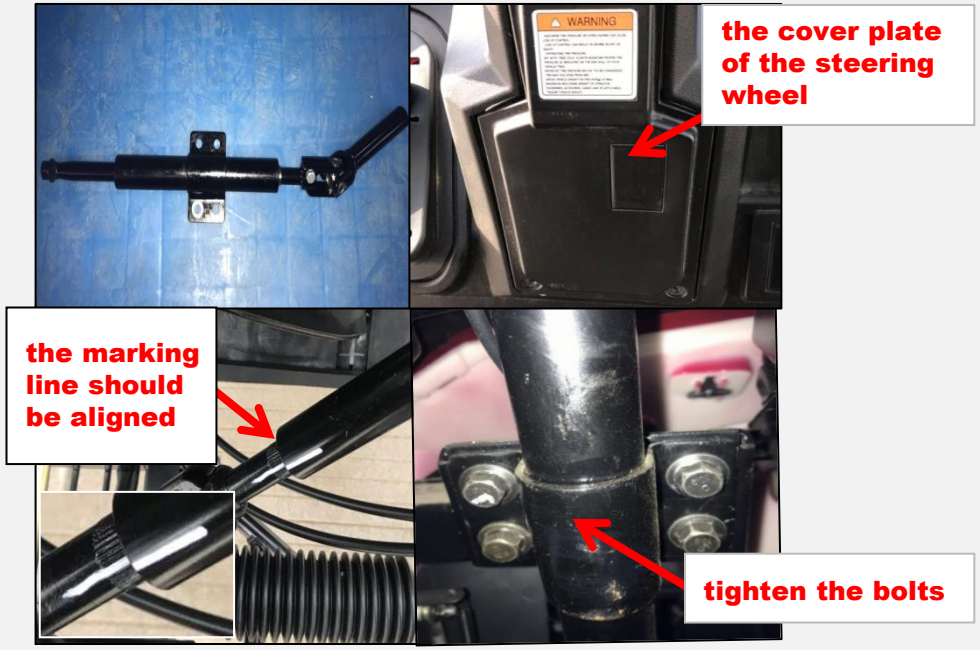

Matters Need Attention：

1. Note that that the marking line should be aligned

2. After assembly, rotate the steering column without any lag

3. The torque 30 ~ 40 N. m

Operation instructions：

1. Remove the cover plate of the steering wheel
2. Insert the steering column from the cover of the steering wheel
3. Connect the steering column with the spline of the steering wheel (note that the marking line should be aligned)
4. Take out the No.3 standard parts bag, use 4PCS bolts M10×1.25×20, preinstall the steering column onto the frame, and finally tighten the bolts.

Tools：

1. Cross screwdriver
2. Sleeve head (14mm)

9. Install upper front mudguards

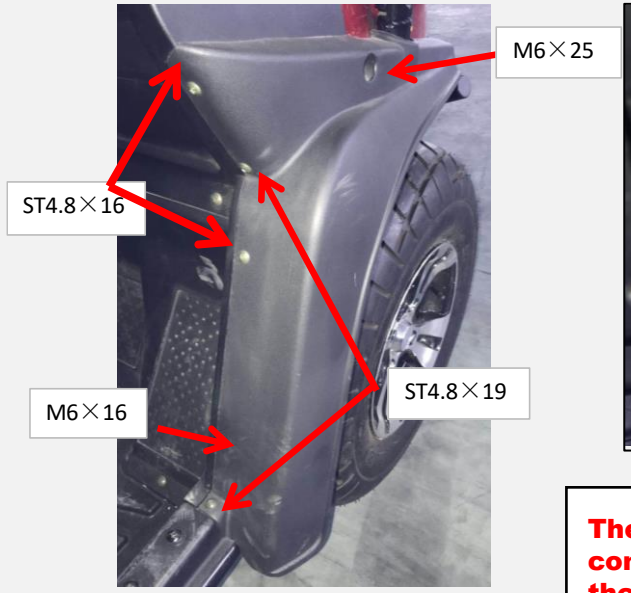

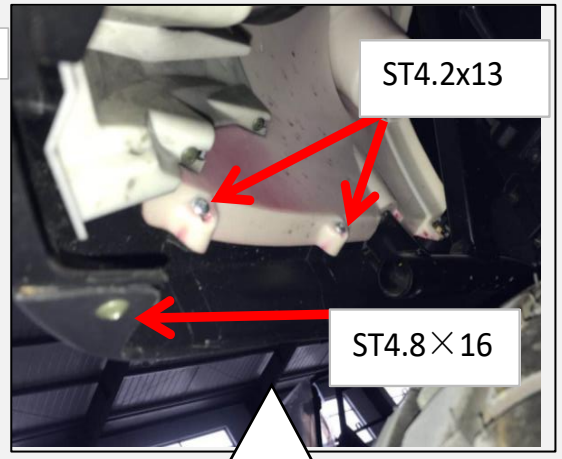

The front fender is connected to the inside of the front mask

Operation instructions：

1. Connect the left/right upper front mudguards to both sides of the instrument panel
2. Connect the left/right upper front mudguards to the removable Hood

Tools：

1. Cross screwdriver

Matters Need Attention：

1. Check whether the upper front mudguards has obvious appearance defects and damage before installation.

2. After installation, check that the gap between mudguards and front panel should be even and beautiful.

10. Install the front bumper

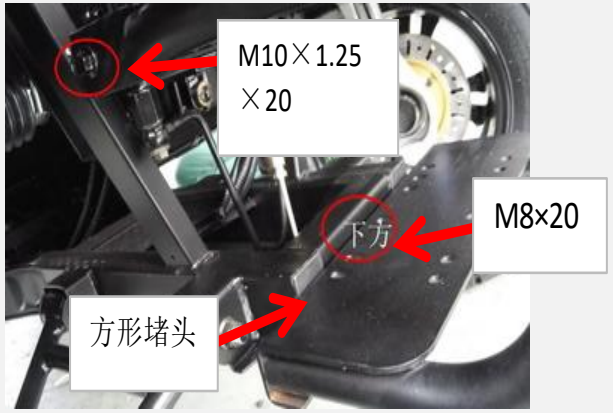

Matters Need Attention：

1. Check the surface of the front bumper before installation

2. M10 torque 30 ~ 40 N. m

M8 torque 20 ~ 25 N. m

Operation instructions：

1. Take out the square plug from the No.11 standard parts bag and hammer it into the front of the frame

2. Take out the No.5 standard parts bag, take out the front bumper, put the cross screwdriver into the threaded hole under the bumper, and temporarily fix the bumper to keep it from falling off, and then use 2PCS M10×1.25×20 bolts to hang the mounting hole of the welding assembly of the front bumper onto the frame, temporarily not tight.

3. Fasten the mounting hole under the welding assembly of the front bumper to the frame with 2PCS M8×20 hexagon flange face bolts

4. Tighten all bolts

Tools：

1. Sleeve head (10mm)
2. Sleeve head (14mm)
3. The hammer
4. Cross screwdriver

11. Install the wheels

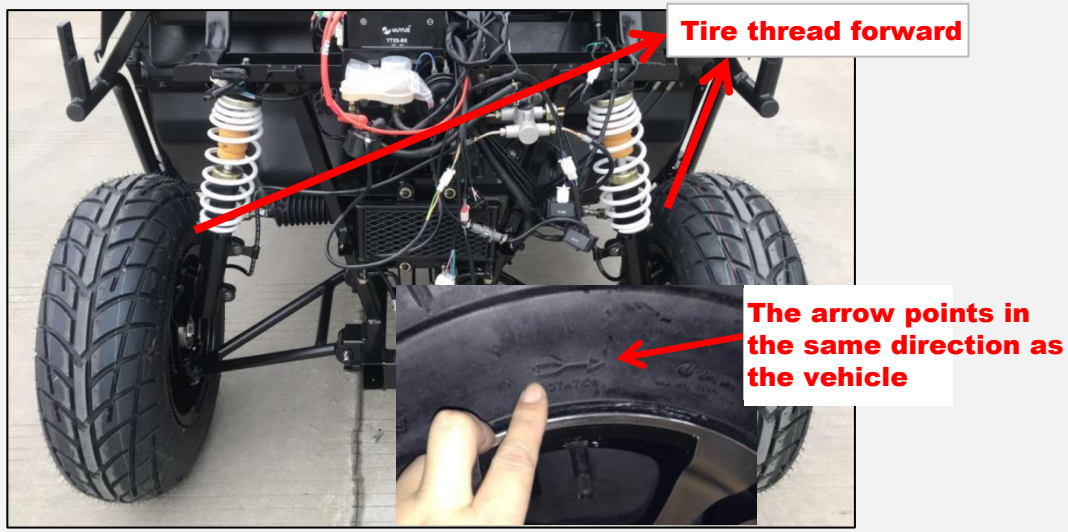

Matters Need Attention：

1. Pay attention to the front, rear and left and right directions when loading the wheel.

2. When fastening the rim nut, pay attention to the pre-tightening, and then tighten in turn according to the diagonal

3. Rim nut torque 60~ 70N.m

Operation instructions：

1. Load the four wheels

2. Remove the rim nut, and preinstall it to the hub bolt and tighten it successively

Tools：

1. Sleeve head (19mm)

12. Install ROP

Matters Need Attention：

1. Inspect each component for appearance damage before installation.

2. Fix the bolt head to the inside.

3. ROB is completely fastened to the frame without clearance

5. Torque 30 ~ 40 N. m

Operation instructions：

1. Open the No.6 standard bag.

2. Install the left/right ROB onto the frame with 8PCS M10×1.5×35 bolts through the mounting hole, and screw on 8PCS M10×1.5 nuts respectively, without tightening them temporarily.

3. Fix and connect the front/rear transverse rod and left/right ROB with 4PCS bolts M10×1.25×45 and 4 nuts M10 nut.

4. Tighten all bolts

Tools：

1. Hexagon socket head (8mm)
2. Wrench(16mm)
3. Sleeve head (14mm)
4. Wrench(14mm)

13. Install the roof

Matters Need Attention：

1. Inspect the roof for appearance damages before installation
2. Pay attention to the front and rear direction of the roof
3. The bolt head is unified on the inside
4. Install the waterproof plug at the red round frame
5. Install bolts and bolt caps in the yellow circle
6. Torque 30 ~ 40 N. m

Operation instructions：

1. Open the No.7 standard parts bag, and fix the roof on the front and rear horizontal pull tube with 4PCS M8×45 bolts and M8 nuts respectively through the roof fixing card
2. Install 4 bolt caps on the roof bolts, and then install the waterproof plug on the roof.

Tools：

1. A wrench (14mm)
2. Sleeve head (14mm)

14. Install the head rest ASSY

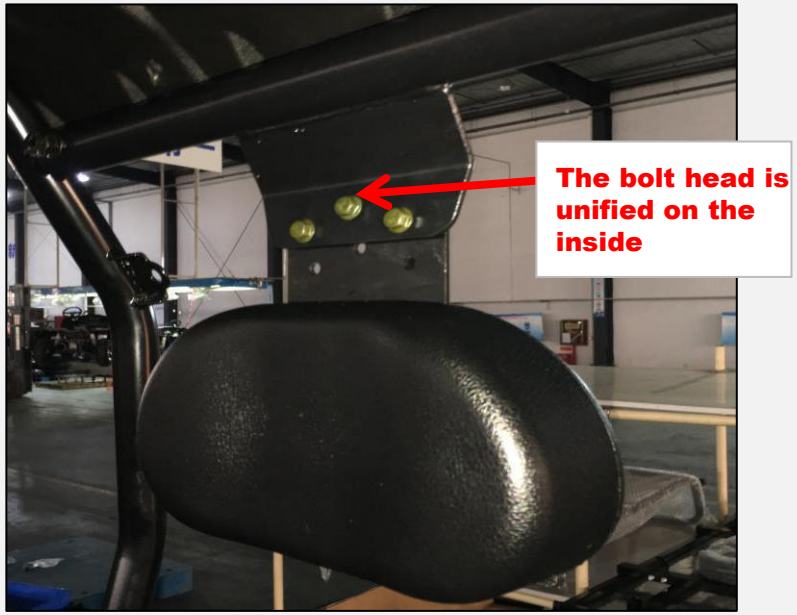

Matters Need Attention：

1. Check the head rest ASSY component for appearance defects before installation

2. The bolt head is unified on the inside

3. The torque 7 ~ 9 n. m

Operation instructions：

Take out the No.8 standard parts bag, and fix the two head rest ASSY components to the two mounting plates of the back transverse tube welding component respectively with 6PCS M6×16 bolts and 6PCS M6 nuts.

Tools：

1. Sleeve head (10mm)

15. Install the rear view mirrors

Operation instructions：

Take out No. 9 standard parts bag and fix the left and right rear view mirrors to the two mounting plates of ROB component respectively with 4 M6×16 bolts

Tools：

1. Sleeve head (14mm, 17mm)

Matters Need Attention：

1. Check the rear view mirrors components for appearance damage.

2. Torque 7 ~ 9 N.m

16. Install back rest

Matters Need Attention：

1. Check whether the backrest packaging components have appearance damages before and after loading;

2. Insert the back rest mounting bracket into the ROB mounting panel from the front to the back. The back rest mounting bracket is narrow at the top and wide at the bottom.

3. Fix the head of the bolt outward uniformly

4. The torque is 30 ~ 40 n. m

Operation instructions：

Take out No. 10 standard piece bag, install back rest on ROB with 4PCS M10×1.25×30 bolts and 4 M10×1.25 nuts, and then tighten

Tools：

1. A wrench (14mm)
2. Sleeve head (14mm)

17. Install belt(3 POINT)

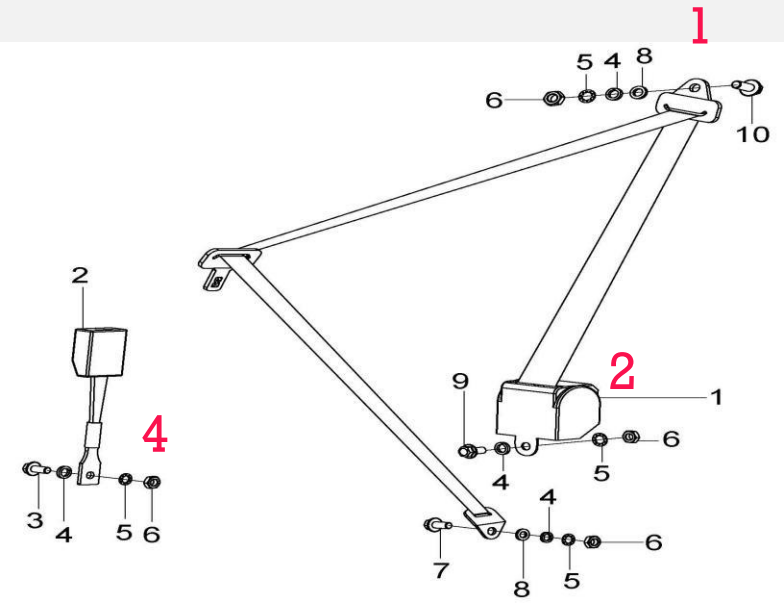

Matters Need Attention：

1. Check the belt retractor, pull out the belt and release it, the belt should be able to rebound quickly.

2. Pay attention to the bolt direction during installation. The bolt head of the retractor and the hanging point of the safety belt is backward, the bolt head of the fixing point under the safety belt is outward, and the bolt head of the safety belt lock is inward.

Operation instructions：

1. Install the seat belt above
2. Install seat belt retractor
3. Install the seat belt underneath
4. Install the seat belt lock

Tools：

1. A wrench (19mm)
2. Sleeve head (14mm)

18. Install exhaust pipe of muffler

Operation instructions：

Attach the exhaust pipe to the muffler.

Tools：

1. Sleeve head (10mm)

Matters Need Attention：

1. Before installation, please note that the bolt should be inserted with the spring gasket and then the flat gasket

2. Torque: 7~ 9n.m

19. Install steering wheel

Matters Need Attention：

1. When installing the steering wheel, pay attention to the direction of the steering wheel

2. The horn port icon on the horn switch is uniformly to the left to ensure the connection and insertion in place

3. After the installation of the steering wheel, the steering wheel should be turned to check the consistency of tire steering, and check whether the steering wheel on both sides of the Angle is consistent

Operation instructions：

1. Remove and install the steering wheel bolts and tools, and remove the plastic axle sleeve of the steering wheel

2. Firstly, insert the plastic sleeve of the steering wheel, tighten the steering wheel, horn switch button and steering wheel decoration plate in turn with 5X20 bolts, and then install the plastic sleeve and bracket.

3. Mount the steering wheel plastic sleeve on the bracket with st4.8x16 screws

4. Test the horn to see if it works

Tools：

1. Cross screwdriver

2. Hexagon socket wrench (3MM)

LONG ROOF INSTALLATION INSTRUCTION

STEP 1：

1、Install plugs at both ends before installing the components

2、Roof support pole is installed in the roof support assembly and adjust the tightness after the roof installed

3、Install front and rear roof support assembly on frame tube assembly shown as picture 1, and finish as picture2

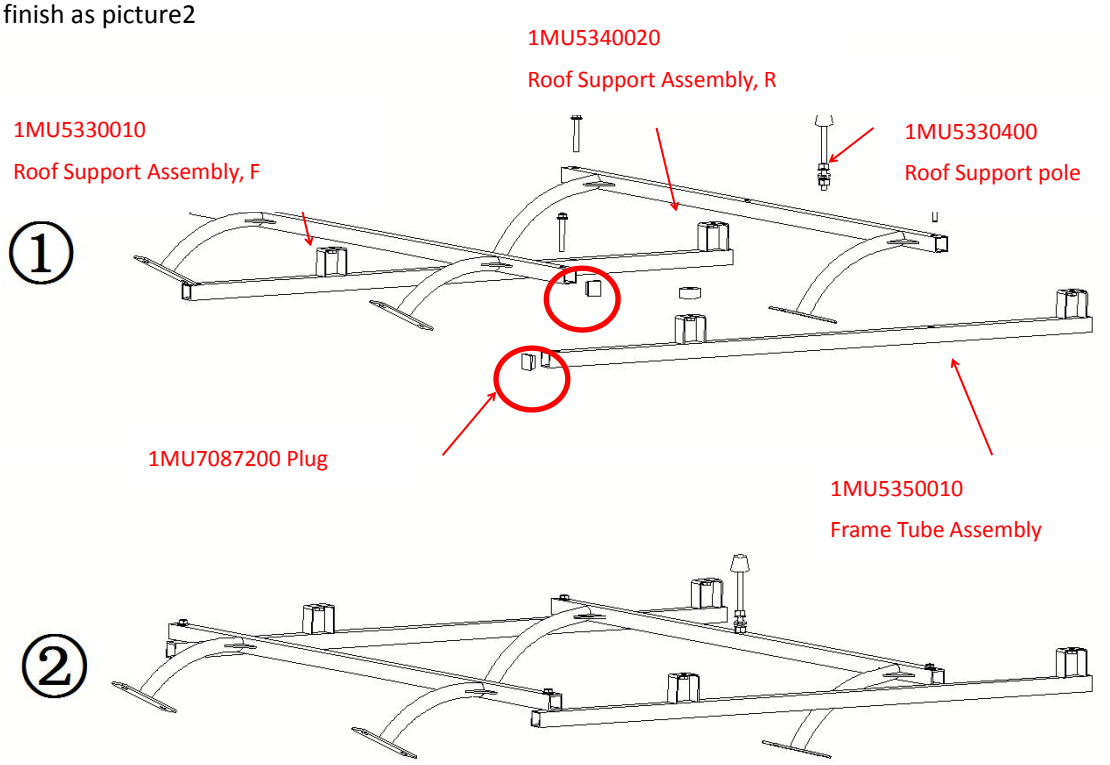

STEP 2：

1、Fixed way: clamp, rubber, shown as picture 3

2、Install the components installed above on the frame ROP bar, shown as picture 4

3、 Note: when the front support assembly is fixed to the ROP front bar, the "z-plate" shall be installed together; "Z-plate" is one of the installation points in the roof, but it is not required for rear support assembly installation.

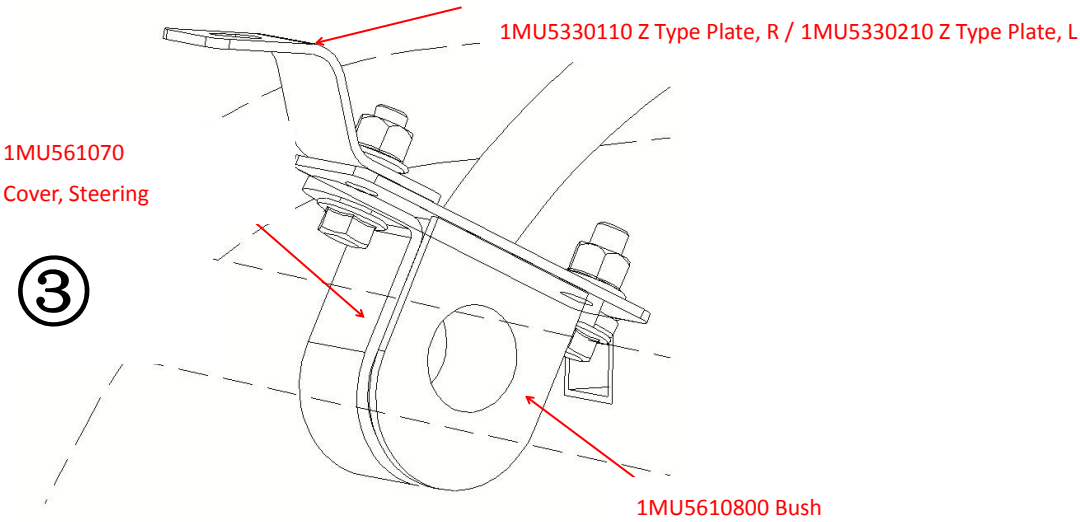

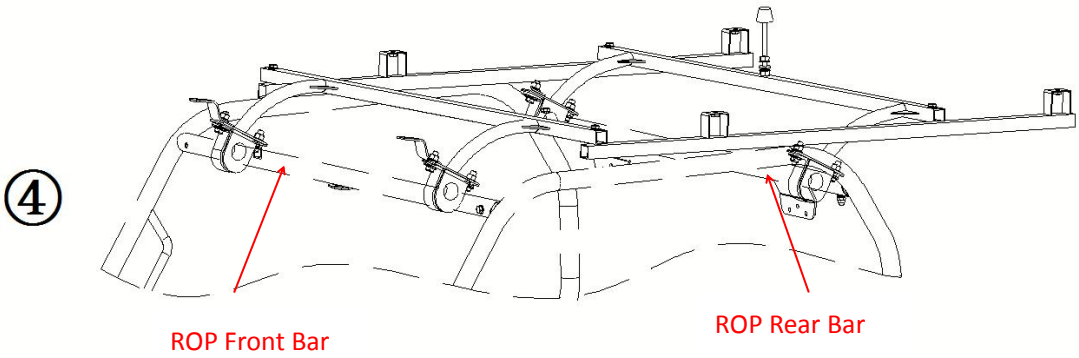

Step 3:

1. Install the roof onto the roof support assembly, rubber pads shall be installed between roof and support assembly shown as picture 5;

2. It is necessary to adjust the tightness between Roof Support pole and roof when installation finished

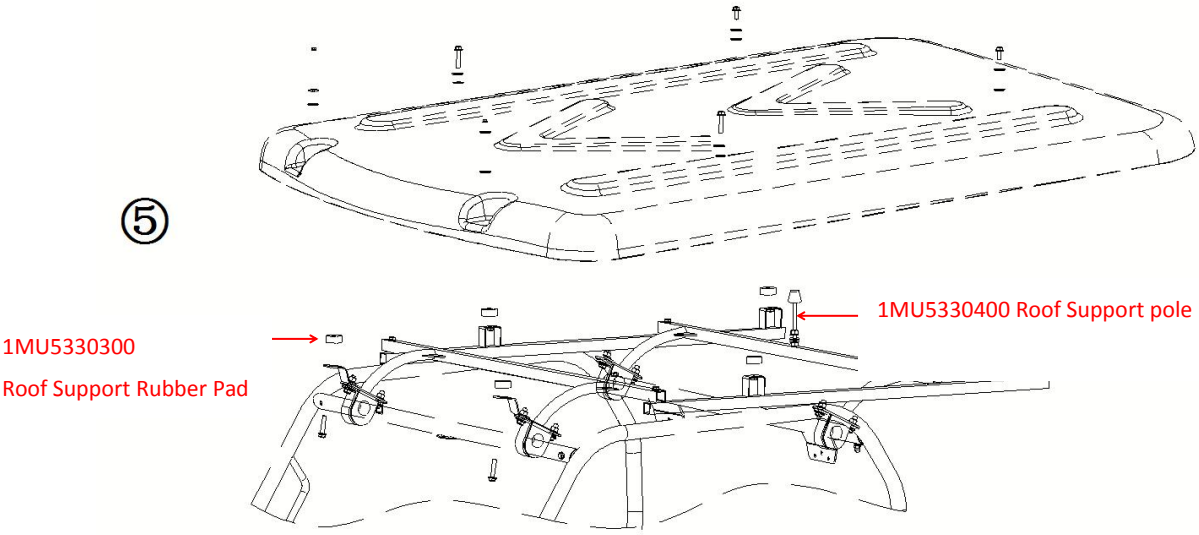

THANK YOU FOR CHOOSING TRAILMASTER TAURUS 200

FOR YOUR SAFETY, PLEASE READ OWNER’S MANUAL FOR MORE IMPORTANT INFORMATON BEFORE USE