OWNER'S/OPERATOR'S MANUAL

WARNING:

Read this Manual, and any Supplements Carefully Before Operating Vehicle.

•Assembly
•Operation
•Maintenance

THIS VEHICLE IS NOT DESIGNED FOR USE ON RENTAL TRACKS OR RACING

XY200U-B

- **BEFORE OPERATING THIS VEHICLE, THE OWNER AND EACH OPERATOR MUST HAVE READ AND HAVE AN UNDERSTANDING OF ALL THE INSTRUCTIONS FOR PROPER ASSEMBLY AND SAFE OPERATION, AS WELL AS THE INSTRUCTIONS CONCERNING THE ENGINE AND ALL OTHER PORTIONS OF THE VEHICLE.**

NOTE: A storage area/toolbox has been provided on the UTV for storage of this manual.
Please keep this manual in storage so that it can be found easily and referenced when needed.

CONTENTS

1.INTRODUCTION ····· 1.1
2. UNDERSTANDING WARNING ····· 2.1
3. SAFETY WARNING ····· 3.1
4. PRE-RIDE ····· 4.1
5. OPERATION WARNING ····· 5.1
6. V.I.N. NUMBER ····· 6.1
7. CONTROL AND FUNCTIONS ····· 7.1
8. STARTING THE ENGINE ····· 8.1
9. BREAK-IN ····· 9.1
10. RIDING GEAR ····· 10.1
11. CARRYING LOADS ····· 11.1
12. DRIVING ····· 12.1
13. CVT SYSTEM ····· 13.1
14. BATTERY ····· 14.1
15. EXHAUST SYSTEM ····· 15.1
16. MAINTENANCE ····· 16.1
17. TROUBLE SHOOTING ····· 17.1
18. TOOL ····· 18.1
19. SPECIFICATION ····· 19.1
20. WIRING DIAGRAM ····· 20.1

1. INTRODUCTION

Introduction

Congratulations on the purchase of your Utility Task Vehicle (UTV). We take pride in offering you this product engineered and manufactured to the highest performance and quality standards. We are sure that you will enjoy superior levels of performance, reliability, riding comfort, and safety.

This manual is provided to help the owner and operators of this UTV become familiar with the operating characteristic, and the many features offered on the UTV. The manual also covers information on the care and maintenance of your UTV.

Please read this manual carefully. The information contained in this Owner's Manual, the Warning Labels supplied with this product will help you to understand the safe use and maintenance of your UTV. Make sure that you understand and follow all Warnings and Instructions in this material.

If you did not receive any of the material listed above, please call your dealer and request to have them sent to you.

Product and specifications are subject to change without notice.

1. INTRODUCTIOPN

Important Safety Notice

●This vehicle is designed and manufactured for off-road use only. It is illegal to operate this vehicle on any public street, road, or highway. Such use is prohibited by law.

●Check the laws and regulations in force before choosing where to operate this vehicle. It is illegal to operate this vehicle on public lands where vehicles its size are prohibited.

●Never make any modifications to the engine, drive system, mechanical or electrical systems of your UTV. Never install aftermarket parts or accessories intended to increase the speed or power of your UTV.

●Failure to follow these warnings increases the possibility of accidents leading to **DEATH** or **SERIOUS INJURY!**

●Additionally, failure to follow these requirements will void the Warranty on your UTV.

NOTE

The addition and use of certain accessories including, (but not limited to) mowers, blades, sprayers, winches and windshields will change the handling characteristics and the performance of your UTV.

Practice Responsible UTV Riding

Make sure that you understand and follow all local, state/province, and federal/national riding laws and requirements.

Remember……Respect your vehicle, respect the environment and respect the property of others. You are responsible for your safety and the safety of others around you when you ride!

1. INTRODUCTIOPN

A UTV CAN BE HAZARDOUS TO OPERATE.

A UTV handles differently from other vehicles including motorcycles, ATVs and cars. A collision rollover can occur quickly, even during routine maneuvers such as turning and driving on hills or over obstacles, if you fail to take proper precautions.

SERIOUS INJURY OR DEATH
can result if you do not follow these instructions.

- Read this manual and all labels carefully and follow the operating procedures described.
- This vehicle is designed to carry the driver and one passenger. Never carry passengers in the cargo bed.
- Always be sure the driver and passenger are wearing seat belts.
- Never allow anyone who is not an adult to operate this UTV.
- Never permit a guest to operate this UTV unless the guest has read this manual and all product labels.
- The driver and passenger must wear approved off-road motorcycle -type helmets that fit properly. The driver and passenger should also wear eye protections (glasses or face shields), gloves, boots, long-sleeved shirts or jackets, and long pants.
- As with any off-road-capable vehicle, there is a risk of tip over or rollover under certain conditions. Uneven terrain or slopes which pitch the vehicle sideways, turning too fast or sharp, or a combination of conditions increase the risk of tip over.
  If you are in a situation where the vehicle is tipping over, do not put your arm or/ and leg outside the vehicle, do not try to stop tipping with your arm or leg. You could be severely injured. You could suffer a crushed hand, arm, leg, or foot, if part of your body is caught underneath the vehicle.
  You must keep your arms and legs inside the vehicle until it has stopped moving.
- Never consume alcohol or drugs before or while operating this UTV.
- Never operate at excessive speeds. Always travel at a speed which is proper for the terrain, visibility and operating conditions, and your experience.
- Never attempt wheelies, jumps or other stunts.
- Always inspect your UTV each time you use it to make sure it is in safe operating condition. Always follow the inspection and maintenance procedures and schedules described in this manual.
- Always keep hands, arms, feet, and legs inside the vehicle at all times during operation. Keep your feet on the floorboard. Never hold onto the enclosure

except when using the handgrip inside the enclosure. Otherwise, your hand could be injured if it is caught between the enclosure and an obstacle outside the vehicle.

- Always keep both hands on the steering wheel when driving.
- Never wrap your thumbs and fingers around the steering wheel. This is particularly important when driving in rough terrain. The front wheels will move right and left as they respond to the terrain, and this movement will be felt in the steering wheel. A sudden jolt could wrench the steering wheel around, and your thumbs or fingers could be injured if they are in the way of the steering wheel spokes.
- Always go slowly and be extra careful when operating on unfamiliar terrain. Always be alert to changing terrain conditions when operating the UTV.
- Never operate on excessively rough, slippery or loose terrain.
- Always follow proper procedures for turning as described in this manual. Practice turning at low speeds before attempting to turn at faster speeds. Do not turn at excessive speed.
- Always have the UTV checked by an authorized dealer if it has been involved in an accident.
- Never operate UTV on hills too steep for the UTV or for your abilities. Practice on smaller hills before attempting larger hills.
- Always follow proper procedures for climbing hills as described in this manual. Check the terrain carefully before you start up any hill. Never climb hills with excessively slippery or loose surfaces. Never open throttle suddenly or make sudden gear changes. Never go over the top of any hill at high speed.
- Always follow proper procedures for going down hills and for braking on hills as described in this manual. Check the terrain carefully before you start down any hill. Never go down a hill at high speed. Avoid going down a hill at an angle which would cause the vehicle to lean sharply to one side. Go straight down the hill where possible.
- Always follow proper procedures for crossing the side of a hill as described in this manual. Avoid hills with excessively slippery or loose surfaces. Never attempt to turn the UTV around on any hill. Avoid crossing the side of a steep hill if possible.
- Always use proper procedures if you stall or roll backwards when climbing a hill. To avoid stalling, maintain a steady speed when climbing a hill. If you stall or roll backwards, follow the special procedure for braking described in this manual.
- Always check for obstacles before operating in a new area. Never attempt to operate over large obstacles, such as large rocks or fallen trees. Always follow proper procedures when operating over obstacles as described in this manual.
- Always be careful of skidding of sliding. On slippery surfaces, such as ice, go

slowly and be very cautious in order to reduce the chance of skidding or sliding out of control.

- Avoid operating the UTV through deep or fast flowing water. Avoid water which exceeds the recommended maximum depth. Go slowly, carefully avoiding sudden movements, maintain a slow and steady forward motion, do not make sudden turns or stops, and do not make sudden throttle changes.
- Wet brakes may have reduced stopping ability. Test your brakes after leaving water. If necessary apply them lightly several times to let friction dry out the pads.
- Always be sure there are no obstacles or people behind you when you operate in reverse. When it is safe to proceed in reverse, go slowly. Avoid turning at sharp angles in reverse.
- Always use the size and type tires specified in this manual. Always maintain proper tire pressure as described in this manual.
- Never modify A UTV through improper installation or use of accessories.
- Never exceed the stated load capacity. Cargo should be as far forward in the bed as possible, and distributed evenly from side to side. Be sure cargo is secured so that it cannot move around during operation. Reduce speed and follow instructions in this manual for carrying cargo or pulling a trailer. Allow greater distance for braking.

2. UNDERSTANDING WARNINGS

ATTENTION:

This is an ADULT VEHICLE ONLY! Not a toy!
READ AND UNDERSTAND WARNINGS AND OWNER'S MANUAL BEFORE OPERATION.

KNOW YOUR VEHICLE BEFORE YOU BEGING RIDING!

Read this manual thoroughly referring to the various areas which are being discussed on your machine. Operating this vehicle carries with it responsibilities for your personal safety, the safety of others, and the protection of our environment.

NOTE: Illustrations used in this manual are for general representation only. Your model may differ.

2. UNDERSTANDING WARNINGS

SAFETY ALERT

WARNINGS identify special instructions or procedures which, if not correctly followed, could result in personal injury, or loss of life. Read all WARNINGS in this manual carefully. Follow their instructions to remain safe.

The following precautionary signal words are used throughout this manual to convey the following messages:

This is the safety alert symbol. When you see this symbol on your machine or in this manual, be alert to the potential for personal injury. Your safety is involved!

WARNING

Indicates a potential hazard which could result in severe injury or death.

CAUTION

Indicates a potential hazard which may result in minor personal injury or damage to the UTV.

CAUTION

Indicates a situation that can result in damage to the machine.

NOTE **The word "NOTE" in this manual will alert you to key information or instructions.**

3. SAFETY WARNING

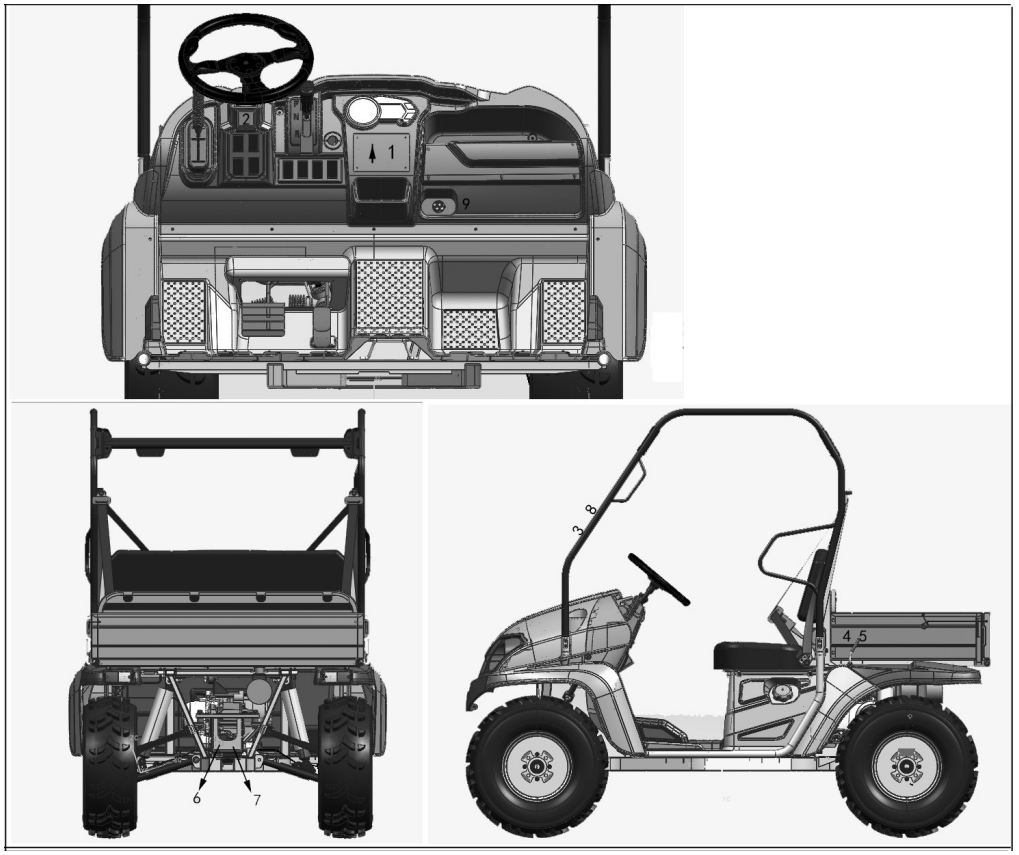

NOTE:
Warning decals have been placed on the vehicle for your protection. Read and follow the instructions on each decal carefully. In the event any decal becomes illegible or comes off, contact your dealer for a replacement.

NOTE:

3. SAFETY WARNING

1

WARNING

Improper use can result in Severe INJURY or DEATH.

This off-highway utility vehicle will handle and maneuver differently from an ordinary passenger car or other vehicle.

- Vehicle capacity:1 operator and 1passenger. Passenger must be able to reach and hold the handgrip inside enclosure.
- This vehicle is recommended only for operators 16 and older with a valid motor vehicle licence. Adults must supervise use by minors. Check state laws for minimum age requirements. Gross Vehicle Weight Rating:669kg (1474lbs) maximum including operator and passenger acces-sories, cargo and trailer tongue weight.
- Passenger and cargo can affect vehicle handling.

ALWAYS

- wear a seat belt when riding in the vehicle.
- keep your hands and feet inside the vehicle at all times-watch for branches, brush, or other hazards that could enter the vehicle.
- drive straight up and down inclines-driving across the side of an incline increases the risk of overturn.

NEVER

- operate through water deeper than 13" (33cm) or fast flowing water-if you must cross shallow, slow moving water, choose your path carefully to avoid sharp drop-offs, large rocks, or slippery surfaces that could cause the vehicle to overturn.
- make sharp, high-speed turns-the vehicle could roll over or go out of control.

ALWAYS USE AN APPROVED HELMET GEAR

NEVER USE ON PUBLIC ROADS OR PAVEMENT

NEVER USE WITH DRUGS OR ALCOHOL

LOCATE AND READ THE OWNER'S MANUAL FOLLOW ALL INSTRUCTION AND WARNINGS.

2

WARNING

IMPROPER TIRE PRESSURE OR OVERLOADING CAN CAUSE LOSS OF CONTROL.
LOSS OF CONTROL CAN RESULT IN SEVERE INJURY OR DEATH.
OPERATING TIRE PRESSURE:SET with tires cold.
ALWAYS MAINTAIN PROPER TIRE PRESSURE AS INDICATED ON THE SIDEWALL OF YOUR VEHICLE TIRES.
NEVER set tire pressure below the recommended, Tire may dislodge from rim.
Gross Vehicle Weight Rating:669kg(1474lbs) maximum including weight of operator, passenger, accessories, cargo,and (if applicable) trailer tongue weight.

3

WARNING

The enclosure cannot protect occupants in all foreseeable accidents, including rollover.

4

WARNING

- Keep hands,body,other persons away when closing bed.
- Do not operate the vehicle with bed up.

3. SAFETY WARNING

5

⚠ WARNING

Severe INJURY or DEATH can result if you ignore the following:

- Maximum Load in Cargo Bed:100kg (220lbs).
- Never carry passengers in cargo bed.
- Cargo can affect handling and stability.

Read Owner' s Manual before loading or towing.

- When loading with cargo or towing a trailer: Reduce speed and allow more room to stop. Avoid hills and rough terrain.
- Be sure cargo is secured — a loose load could change handling unexpectedly.
- Keep weight in the cargo bed centered , and as low and far forward as possible. Top-heavy loads increase the risk of overturn.

6

⚠ WARNING

Pulling excessive loads can cause loss of stability or control of the vehicle.

Do not exceed the load capacity for the hitch.

Trailer Load Capacity of this vehicle is 450lbs /200kg and 25lbs/ 11kg tongue weight.

7

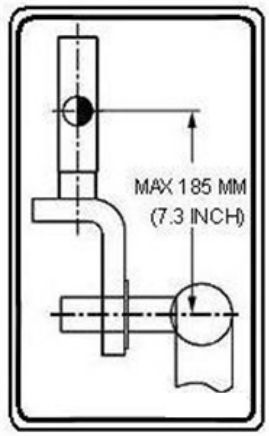

3. SAFETY WARNING

8

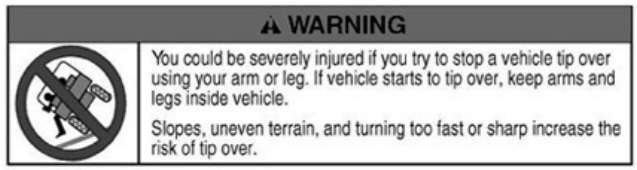

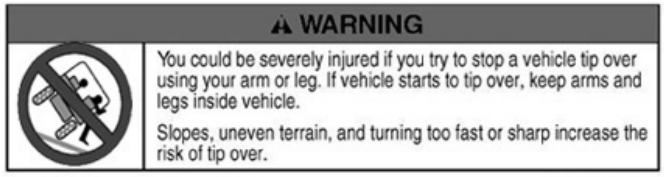

9

4. DAILY PRE-RIDE INSPECTION

WARNING

You must inspect your UTV each time before riding to ensure it is in proper working order. If proper inspection is not done, severe injury or death could result.

Use the following checklist to verify your machine is in proper working order each time you ride.

ITEM/ INSPECTION PROCEDURE

1. Tire— check condition and pressures.

2. Fuel tank— checking for leaking, fill the fuel tank to its proper lever.

3. All brakes—check fluid level, check operation, adjustment (includes parking brake).

● Brake pedal

Check for correct brake pedal free play. If the brake pedal free play is incorrect, have an authorized dealer adjust it. Check the operation of the brake pedal. It should move smoothly and there should be a firm feeling when the brakes are applied. If not, have the vehicle inspected by your dealer.

● Brake fluid leakage

Check to see if any brake fluid is leaking out of the pipe joints or the brake fluid reservoir. Apply the brakes firmly for one minute. If there is any leakage, have the vehicle inspected by an authorized dealer.

● Brake fluid level

Check the brake fluid level.

Add fluid if necessary.

● Brake operation

Test the brakes at slow speed after starting out to make sure they are working properly. If the brakes do not provide proper braking performance, inspect the brake system.

4. Throttle / Accelerator pedal— check for free operation, closing and free play.

Check to see that the accelerator pedal operates correctly. It must operate smoothly and fully spring back to the idle position when be released.

Have an authorized dealer repair as necessary for proper operation.

5. Headlight / Taillight / Brake light— check operation of all indicator lights and

switches.

6. Wheels— check for tightness of wheel nuts and axle nuts, and check for those axle nuts are secured by cotter pins.
Check balance/ damage/ run out. Have an authorized dealer repair/ replace if necessary.
Check bearing assemblies for looseness/damage. Have an authorized dealer replace if damaged.

7. Air cleaner element— check for dirt; clean or replace.

8. Steering— check for free operation noting any unusual looseness in any area. Park on level ground. Turn the steering wheel right and left. Check for excessive free play, abnormal noises, or a rough feeling. Have an authorized dealer repair as necessary for proper operation.

9. Loose parts—visually inspect vehicle for any damaged components or loose nuts/bolts or fasteners.
Always check the tightness of chassis fittings and fasteners before a ride. Take the vehicle to your dealer for correct tightening torque.

10. Operator's and passenger's helmets, goggles and clothing.

11. Seat belts— Check for proper operation and belt wear.
Make sure that both seat belts are not frayed or damaged. The seat belt must move smoothly when pulled out and retract on its own when released. The latch plate should click securely into the buckle and release when the release button is pushed firmly. Clean off any dirt or mud which could affect operation. Have an authorized dealer repair as necessary for proper operation.

5. OPERATION WARNINGS

WARNING

POTENTIAL HAZARD
Improper handle of gasoline.
WHAT CAN HAPPEN
Gasoline can catch fire and you could be burned.
HOW TO AVOID THE HAZARD
Always turn off the engine when refueling. Do not refuel right after the engine has been running and is still very hot. Do not spill gasoline on the engine or exhaust pipe/muffler when refueling. Never refuel while smoking, or while in the vicinity of sparks, open flames, or other sources of ignition such as the pilot lights of water heaters and clothes dryers.

WARNING

POTENTIAL HAZARD
Check the fuel system while smoking or near an open flame.
WHAT CAN HAPPEN
Fuel can ignite or explode, causing severe injury or property damage.
HOW TO AVOID THE HAZARD
Do not smoke when checking the fuel system. Make sure there are no open flames or sparks in the area, including pilot lights from water heaters or furnaces.

WARNING

POTENTIAL HAZARD
When transporting the vehicle in another vehicle, be sure it is kept in an upright position. Otherwise, fuel may leak out of fuel tank.
WHAT CAN HAPPEN
Gasoline is poisonous and can cause injuries.
HOW TO AVOID THE HAZARD
If you should swallow some gasoline or inhale a lot of gasoline vapor, or get some

gasoline in your eyes, see your doctor immediately. If gasoline spills on your skin, wash with soap and water. If gasoline spills on your clothing, change your clothes.

WARNING

POTENTIAL HAZARD

Malfunction of the accelerator pedal.

WHAT CAN HAPPEN

The accelerator pedal could be hard to operate, making it difficult to speed up or slow down when you need to. This could cause an accident.

HOW TO AVOID THE HAZARD

Check the operation of the accelerator pedal before you start the engine. If it does not work smoothly, check for the cause. Correct the problem before operating the vehicle. Consult an authorized dealer if you can't find or solve the problem yourself.

WARNING

POTENTIAL HAZARD

Take a loose seat.

WHAT CAN HAPPEN

The operator could lose control or the operator or passenger could fall if the seat is loose during operation.

HOW TO AVOID THE HAZARD

Make sure the seat is securely latched.

WARNING

POTENTIAL HAZARD

Not wearing the seat belt.

Wear the seat belt improperly.

WHAT CAN HAPPEN

There is increased risk of being killed or seriously injured in an accident.

HOW TO AVOID THE HAZARD

Always wear your seat belt when riding in the vehicle.

Be sure the seat belt is close-fitting across your hips and chest and is latched securely.

5. OPERATION WARNINGS

WARNING

POTENTIAL HAZARD

Try to stop the tipping vehicle with your arm or leg .

WHAT CAN HAPPEN

You could be severely injured. You could suffer a crushed hand, arm, leg, or foot.

HOW TO AVOID THE HAZARD

You must keep your arms and legs inside the vehicle until it has stopped moving.

As with any off-road-capable vehicle, there is a risk of tip which can be over or rollover on certain conditions. Uneven terrain or slopes which pitch the vehicle sideways, turning too fast or sharp, or a combination of conditions increase the risk of tip over.

If you are in a situation where the vehicle is tipping over, do not put your arm or/ and leg outside the vehicle, do not try to stop tipping with your arm or leg. You could be severely injured. You could suffer a crushed hand, arm, leg, or foot, if part of your body is caught underneath the vehicle.

WARNING

POTENTIAL HAZARD

Pinch points.

WHAT CAN HAPPEN

You or someone else could be pinched between the cargo bed and the frame when the bed is being lowered.

HOW TO AVOID THE HAZARD

Before closing the cargo bed, be sure others are standing away from the vehicle. Keep hands and fingers away from the pinch points between the bed and the frame.

WARNING

POTENTIAL HAZARD

Overload the cargo bed.

WHAT CAN HAPPEN

Could cause changes in vehicle handling which could lead to an accident.

5. OPERATION WARNINGS

HOW TO AVOID THE HAZARD

Never exceed the stated maximum load limit for this cargo bed.

Cargo should be properly distributed and securely attached.

Reduce speed when carrying cargo. Allow greater distance for braking.

WARNING

POTENTIAL HAZARD

Carry a passenger/ passengers in the cargo bed.

WHAT CAN HAPPEN

The passenger(s) could fall, be thrown out, or be struck by objects in the cargo bed.

HOW TO AVOID THE HAZARD

Never carry a passenger/ passengers in the cargo bed. This cargo bed is designed to carry cargo only.

WARNING

POTENTIAL HAZARD

Improper shock absorber adjustment.

WHAT CAN HAPPEN

Uneven adjustment can cause poor handling and loss of stability, which could lead to an accident.

HOW TO AVOID THE HAZARD

Always adjust the shock absorbers on the left and right side to the same setting.

WARNING

POTENTIAL HAZARD

Drive with improperly operating brakes.

WHAT CAN HAPPEN

You could lose braking ability, which could lead to an accident.

HOW TO AVOID THE HAZARD

Always check the brakes at the start of every ride. Do not operate the vehicle if you find any problem with the brakes. If a problem cannot be corrected by the adjustment procedures provided in this manual, have the vehicle inspected by an authorized dealer.

5. OPERATION WARNINGS

WARNING

POTENTIAL HAZARD

Improper care when refueling.

WHAT CAN HAPPEN

Fuel can spill, which can cause a fire and severe injury. Fuel expands when it heats up. If the fuel tank is overfilled, fuel could spill out due to heat from the engine or the sun.

HOW TO AVOID THE HAZARD

Do not overfill the fuel tank. Be careful not to spill fuel, especially on the engine or exhaust pipe. Wipe up any spilled fuel immediately. Be sure the fuel tank cap is closed securely.

WARNING

POTENTIAL HAZARD

Operate vehicle without being familiar with all controls.

WHAT CAN HAPPEN

Loss of control, which could cause an accident or injury.

HOW TO AVOID THE HAZARD

Read the Owner's Manual carefully. If there is a control or function you do not understand, ask our authorized dealer.

WARNING

POTENTIAL HAZARD

Freezing control cables in cold weather.

WHAT CAN HAPPEN

You could be unable to control the vehicle, which could lead to an accident or collision.

HOW TO AVOID THE HAZARD

When riding in cold weather, always make sure all control cables work smoothly before you begin riding.

WARNING

POTENTIAL HAZARD

Overload this vehicle or carrying or towing cargo improperly.

5. OPERATION WARNINGS

WHAT CAN HAPPEN

Could cause changes in vehicle handling which could lead to an accident.

HOW TO AVOID THE HAZARD

Never exceed the stated load capacity for this vehicle.

Cargo should be properly distributed and securely attached.

Reduce speed when carrying cargo or pulling a trailer. Allow greater distance for braking.

WARNING

POTENTIAL HAZARD

Service an engine while it is running.

WHAT CAN HAPPEN

Moving parts can catch clothing or parts of the body, causing injury.

Electrical components can cause shocks or can start fires.

HOW TO AVOID THE HAZARD

Turn off the engine when performing maintenance unless otherwise specified.

Have an authorized dealer perform service if you are not familiar with vehicle service.

WARNING

POTENTIAL HAZARD

Operate this vehicle with improper modifications.

WHAT CAN HAPPEN

Improper installation of accessories or modification of this vehicle may cause changes in handling which in some situations could lead to an accident.

HOW TO AVOID THE HAZARD

Never modify this vehicle through improper installation or use of accessories. All parts and accessories added to this vehicle should be genuine parts or equivalent components designed for use on this vehicle and should be installed and used according to instructions. If you have questions, consult an authorized dealer.

WARNING

POTENTIAL HAZARD

Use low flash point solvents or gasoline to clean the sponge material.

5. OPERATION WARNINGS

WHAT CAN HAPPEN

Low flash point solvents or gasoline can catch fire or explode.

HOW TO AVOID THE HAZARD

Use parts cleaning solvent to clean the sponge material.

WARNING

POTENTIAL HAZARD

Hot exhaust system.

WHAT CAN HAPPEN

Could injure the eyes. Could cause burns.
Could cause carbon monoxide poisoning, possibly leading to death.
Could start a fire.

HOW TO AVOID THE HAZARD

When cleaning the spark arrester: Always let the exhaust system cool prior to touching exhaust components.
Do not start the engine when cleaning the exhaust system.

WARNING

POTENTIAL HAZARD

Operate with improperly serviced or adjusted brakes.

WHAT CAN HAPPEN

You could lose braking ability, which could lead to an accident.

HOW TO AVOID THE HAZARD

After servicing:

- Make sure the brakes operate smoothly and that the brake pedal position is correct.
- Make sure the brakes do not drag.
- All of air must be bled from the brake system.

Replacement of brake components requires professional knowledge. These procedures should be performed by an authorized dealer.

5. OPERATION WARNINGS

WARNING

POTENTIAL HAZARD

Damaged control cables.

WHAT CAN HAPPEN

Corrosion can result when the outer covering of control cables becomes damaged. Cables can also become frayed or kinked. Operation of controls could be restricted, which could cause an accident or injury.

HOW TO AVOID THE HAZARD

Inspect cables frequently. Replace damaged cables.

WARNING

POTENTIAL HAZARD

Failure to handle batteries or battery electrolyte carefully.

WHAT CAN HAPPEN

You could be poisoned. You could be severely burned by the sulfuric acid in battery electrolyte. Batteries produce explosive gases.

HOW TO AVOID THE HAZARD

Avoid contact with skin, eyes or clothing. Always shield eyes when working near batteries. Keep out of reach of children.

Antidote:

EXTERNAL: Flush with water.

INTERNAL: Drink large quantities of water or milk. Follow with milk of magnesia, beaten egg or vegetable oil. Get prompt medical attention.

EYES: Flush with water for 15 minutes and get prompt medical attention. Keep batteries away from sparks, flames, cigarettes or other sources of ignition. Ventilate when charging or using in a closed space.

WARNING

POTENTIAL HAZARD

Use an improper fuse.

WHAT CAN HAPPEN

5. OPERATION WARNINGS

An improper fuse can cause damage to the electrical system, which could lead to a fire.

HOW TO AVOID THE HAZARD

Always use a fuse of the specified rating. Never use a material in place of the proper fuse.

WARNING

POTENTIAL HAZARD

A headlight bulb is hot when it is on and immediately after it is turned off.

WHAT CAN HAPPEN

You can be burned, or a fire could start if the bulb touches something flammable.

HOW TO AVOID THE HAZARD

Wait for the bulb to cool before touching or removing it.

WARNING

POTENTIAL HAZARD

Operate with wet brakes after washing.

WHAT CAN HAPPEN

Wet brakes may have reduced stopping ability, increasing the chance of an accident.

HOW TO AVOID THE HAZARD

Test the brakes after washing. Apply the brakes several times at slow speeds to let friction dry out the linings.

WARNING

POTENTIAL HAZARD

Operate/ ride this UTV without wearing an approved helmet, eye protection and protective clothing.

WHAT CAN HAPPEN

Operating/ riding without an approved helmet increases your chances of a severe head injury or death in the event of an accident.

Operating/ riding without eye protection can result in an accident and increases your

5. OPERATION WARNINGS

chances of a severe injury in the event of an accident.

HOW TO AVOID THE HAZARD

Always wear an approved helmet which fits properly.

You should also wear: eye protection (goggles or face shield); gloves; boots; long-sleeved shirt or jacket; and long pants.

WARNING

POTENTIAL HAZARD

Operate this UTV after consuming alcohol or drugs.

WHAT CAN HAPPEN

Could seriously affect your judgment.

Could cause you to react more slowly.

Could affect your balance and perception.

Could result in an accident.

HOW TO AVOID THE HAZARD

Never consume alcohol or drugs before or while driving this UTV.

WARNING

POTENTIAL HAZARD

Operate this UTV at excessive speeds.

WHAT CAN HAPPEN

Increases your chances of losing control of the UTV, which can result in an accident.

HOW TO AVOID THE HAZARD

Always travel at a speed which is proper for the terrain, visibility and operating conditions; and your experience.

WARNING

POTENTIAL HAZARD

Attempting wheel jumps and other stunts.

WHAT CAN HAPPEN

Increases the chance of an accident, including an overturn.

HOW TO AVOID THE HAZARD

Never attempt stunts, such as wheelies or jumps.

5. OPERATION WARNINGS

WARNING

POTENTIAL HAZARD
Failure to inspect the UTV before operating.
Failure to properly maintain the UTV.
WHAT CAN HAPPEN
Increases the possibility of an accident or equipment damage.
HOW TO AVOID THE HAZARD
Always inspect your UTV each time you use it to make sure the UTV is in safe operating condition.
Always follow the inspection and maintenance procedures and schedules described in the Owner's Manual.

WARNING

POTENTIAL HAZARD
Remove hands from steering wheel or feet from footrests during operation.
WHAT CAN HAPPEN
Removing even one hand or foot can reduce your ability to control the UTV or could cause you to lose your balance and fall off the UTV.

HOW TO AVOID THE HAZARD
Always keep both hands on the steering wheel and both feet on the footrests of your UTV during operation.

WARNING

POTENTIAL HAZARD
Failure to use extra care when operating this UTV on unfamiliar terrain.
WHAT CAN HAPPEN
You can come upon hidden rocks, bumps, or holes, without enough time to react.
Could result in the UTV overturning or going out of control.
HOW TO AVOID THE HAZARD
Go slowly and be extra careful when operating on unfamiliar terrain.
Always be alert to changing terrain conditions when operating the UTV.

5. OPERATION WARNINGS

WARNING

POTENTIAL HAZARD
Climb hills improperly.
WHAT CAN HAPPEN
Could cause loss of control or cause UTV to overturn.
HOW TO AVOID THE HAZARD
Always follow proper procedures for climbing hills as described in the Owner's Manual.
Always check the terrain carefully before you start up any hill.
Never climb hills with excessively slippery or loose surfaces.
Never open the throttle suddenly. The UTV could flip over backwards.
Never go over the top of any hill at high speed. An obstacle, a sharp drop, or another vehicle or person could be on the other side of the hill.

WARNING

POTENTIAL HAZARD
Turn improperly.
WHAT CAN HAPPEN
UTV could go out of control, causing a collision or overturn.
HOW TO AVOID THE HAZARD
Always follow proper procedures for turning as described in the Owner's Manual.
Practice of turning at low speeds before attempting to turn at faster speeds.
Do not turn at excessive speed.

WARNING

POTENTIAL HAZARD
Operate on excessively steep hills.
WHAT CAN HAPPEN
The vehicle can overturn more easily on extremely steep hills than on level surfaces or small hills.
HOW TO AVOID THE HAZARD
Never operate the UTV on hills too steep for the UTV or for your abilities.
Practice on smaller hills before attempting large hills.

5. OPERATION WARNINGS

Never operate UTV on hills steeper than 15％.

WARNING

POTENTIAL HAZARD

Go down a hill improperly.

WHAT CAN HAPPEN

Could cause loss of control or cause UTV to overturn.

HOW TO AVOID THE HAZARD

Always follow proper procedures for going down hills as described in the Owner's Manual.

NOTE: A special technique is required when braking as you go downhill.

Always check the terrain carefully before you start down any hill.

Never go down a hill at high speed.

Avoid going down a hill at an angle which would cause the vehicle to lean sharply to one side.

Go straight down the hill where possible.

WARNING

POTENTIAL HAZARD

Improperly cross hills or turning on hills.

WHAT CAN HAPPEN

Could cause loss of control or cause UTV to overturn.

HOW TO AVOID THE HAZARD

Never attempt to turn the UTV around on any hill until you have mastered the turning technique as described in the Owner's Manual on level ground. Be very careful then turning on any hill.

Avoid crossing the side of a steep hill if possible.

When crossing the side of a hill:

Always follow proper procedures as described in the Owner's Manual.

Avoid hills with excessively slippery or loose surfaces.

WARNING

POTENTIAL HAZARD

Stalling, rolling backwards or improperly dismounting while climbing a hill.

WHAT CAN HAPPEN

5. OPERATION WARNINGS

Could result in UTV overturned.

HOW TO AVOID THE HAZARD

Maintain steady speed when climbing a hill.

If you lose all forward speed:

Keep weight uphill.

Apply the brakes.

Lock parking brake after you are stopped.

If you begin rolling backwards:

Keep weight uphill; never apply engine power.

Apply the brake gradually.

When fully stopped, apply rear brake as well, and then lock parking brake.

Dismount on uphill side, or to either side if pointed straight uphill.

WARNING

POTENTIAL HAZARD

Improperly operate over obstacles.

WHAT CAN HAPPEN

Could cause loss of control or a collision.

Could cause the UTV to overturn.

HOW TO AVOID THE HAZARD

Before operating in a new area, check for obstacles.

Use extreme caution when riding over large obstacles, such as large rocks or fallen trees.

If you cannot avoid obstacles, always follow proper procedures as described in the Owner's Manual.

WARNING

POTENTIAL HAZARD

Skidding or sliding.

WHAT CAN HAPPEN

You may lose control of the UTV.

You may also regain traction unexpectedly, which may cause the UTV to overturn.

HOW TO AVOID THE HAZARD

5. OPERATION WARNINGS

On slippery surfaces, such as ice, go slowly and be very cautious in order to reduce the chance or skidding or sliding out of control.

WARNING

POTENTIAL HAZARD
Operate this UTV through deep or fast flowing water.
WHAT CAN HAPPEN
Tires may float, causing loss of traction and loss of control, which could lead to an accident.
HOW TO AVOID THE HAZARD
Never operating the UTV through water which exceeds the recommended maximum depth in this manual.
Avoid operating the UTV through deep or fast flowing water. If you cannot avoid water, go slowly, balance your weight carefully avoiding sudden movement, maintain a slow and steady forward motion, do not make sudden turns or stops, and do not make sudden throttle changes.
Remember that wet brakes may have reduced stopping ability.
Test your brakes after leaving water. If necessary, apply them several times to let friction dry out the pads.

WARNING

POTENTIAL HAZARD
Improperly operate in reverse.
WHAT CAN HAPPEN
You could hit an obstacle or person behind you, resulting in severe injury.
HOW TO AVOID THE HAZARD
When you select reverse gear, make sure there are no obstacles or people behind you. When it is safe to proceed, go slowly.

WARNING

POTENTIAL HAZARD
Operate this UTV with improper tires, or with improper or uneven tire pressure.

5. OPERATION WARNINGS

WHAT CAN HAPPEN

Use of improper tires on this UTV, or operation of this UTV with improper or uneven tier pressure, may cause loss of control, and increases the risk of an accident.

HOW TO AVOID THE HAZARD

Always use the size and type ties specified in the Owner's Manual for this vehicle.
Always maintain proper tire pressure a described in the Owner's Manual.
Use proper pressures stated on the side wall of the tire when seating the tire beads. Higher pressures may cause the tire to burst. Inflate the tires very slowly and carefully. Fast inflation could cause the tire to burst.

WARNING

POTENTIAL HAZARD

Ride on frozen lakes and rivers.

WHAT CAN HAPPEN

Severe injury or death can result if the UTV and /or the operator break through the ice.

HOW TO AVOID THE HAZARD

Never ride you UTV on a frozen body of water.

WARNING

After a rollover or an accident, have a qualified service dealer check the complete machine including, but not limited to, brakes, throttle and steering for possible damage.

WARNING

Safe operation of this rider active vehicle requires good judgment and physical skills. Persons with cognitive or physical disabilities who operate this vehicle have an increased risk of overturns and loss of control which could result in severe injury or death.

CAUTION

Keep combustible materials away from exhaust system. Fire may result.

6. V.I.N., ENGINE SERIAL NUMBER AND KEY

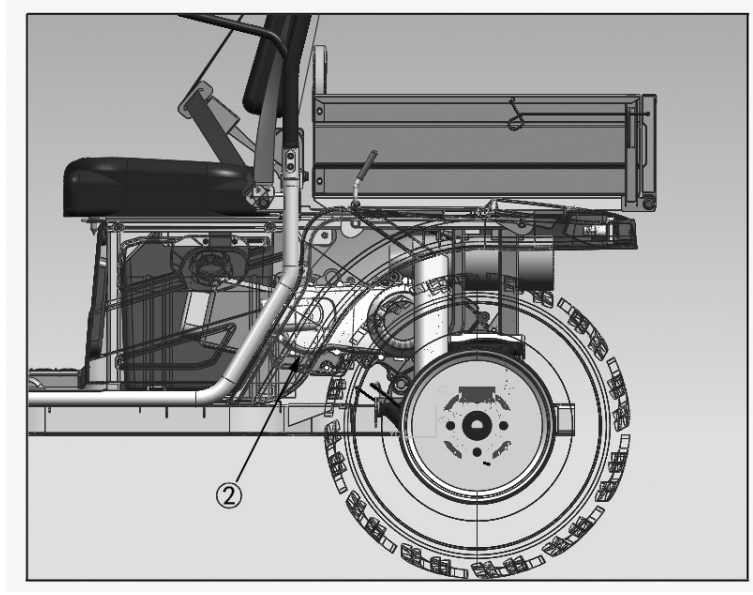

Record these numbers from your UTV in the spaces provided.

1. Frame VIN (found on the rear right of the frame seat tube)

2. Engine Serial Number (Left side of engine crankcase)

Remove the spare key and store it in a safe place. Your key can be duplicated only by obtaining a key blank and having it cut by mating it with your existing key.

6. V.I.N., ENGINE SERIAL NUMBER AND KEY

Record Key Number

The vehicle frame and engine serial numbers are important for model identification when registering your vehicle, obtaining insurance or whenever replacement parts are required. In the event your vehicle is stolen these numbers are essential to the recovery and identification of your UTV.

7. CONTROLS AND PARTS FUNCTIONS

ELECTRICAL SWITCHES

Switch Panel (U.S.)

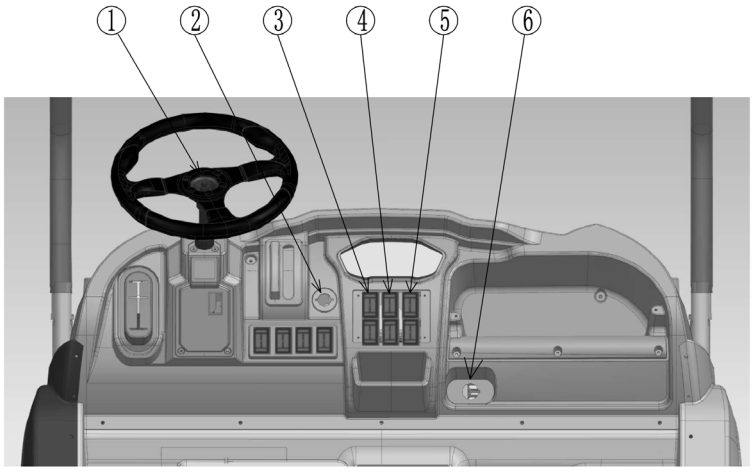

1. Horn Switch 2. Ignition Switch 3. Light Switch 4. High/Low Beam Switch
5. Turn Signal Switch 6. Accessory Socket

1. Horn Switch -- Turns on the horn.
2. Ignition Switch

Functions of the respective switch positions are as follows:

ON: All electrical circuits are supplied with power.

OFF: All electrical circuits are switched off. The key can be removed in this position.

START: The electric starter is engaged by turning and holding the key in this position. Release the key when the engine starts.

CAUTION

Do not operate the electric starter continuously for more than 5 seconds, or starter damage could occur. Wait at least 5 seconds between each operation of the electric starter to let it cool.

Do not turn the key to the "START" position with the engine running, or damage to the electric starter can result.

3. Light Switch -- turns on the headlight and rear position lights.
4. Hi/ Lo Beam Switch – switches between the high and low beam of headlight.
5. Turn Signal Switch – to turn on left or right turn signals (optional).
6. See "**ACCESSORY SOCKET**".

7. CONTROLS AND PARTS FUNCTIONS

LCD Meter

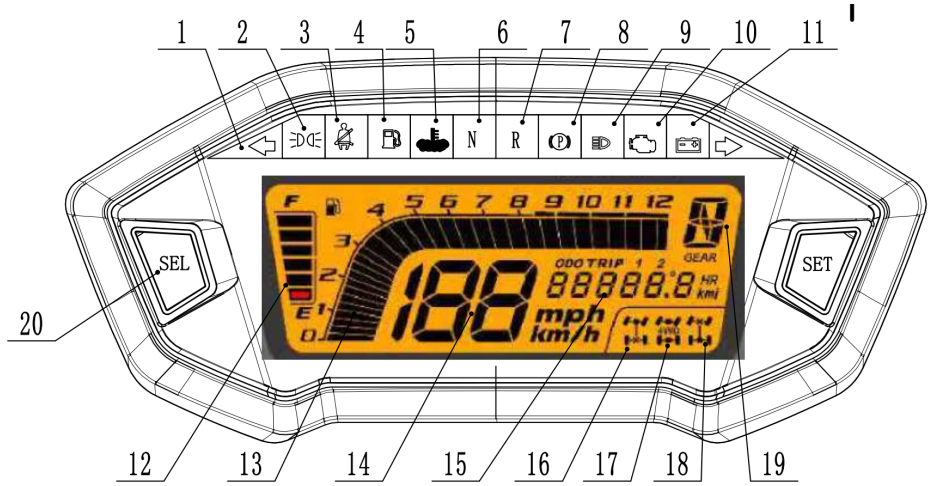

1. Left/Right turn signal indicator	11. Low battery warning
2. Headlight switch indicator	12. Fuel Gauge
3. Seat belt warning	13. Engine RPM
4. Low fuel level warning indicator	14. Speed
5. N/A	15. Odometer
6. Neutral indicator	16. N/A
7. Reverse indicator	17. N/A
8. N/A	18. N/A
9. High beam headlight indicator	19. Transmission position indicator
10. EFI fault indicator	20. Function buttons

Button functions:

Function selection		Function setting			
SET NO.	Display	SET NO.	Function	SEL	Function
0	ODO				
1	Trip1			Long Press 5S	Clearing
2	Trip2			Long Press 5S	Clearing
3	Usage time				
4	Clock	Long Press 5S	Select hours	Adjust hours	

7. CONTROLS AND PARTS FUNCTIONS

		1	Select minutes	Adjust minutes	
		2	Select mileage unit	km<-->mile	
5	Battery voltage				
6	Backlight brightness	4	Adjust Backlight brightness	Select brightness	
7	DTC number				

DTC number	DTC Descriptor
P0107	Map Open/GND
P0108	Map Short V
P0112	IAT Short GND
P0117	Oil Temp Sensor Short GND
P0118	Oil Temp Sensor Short V|Open
P0122	TPS Open|GND
P0123	TPS Short V
P0131	O2 Short GND
P0132	O2 Short V
P0038	O2 heater V
P0037	O2 heater Open|GND
P0201	Injector1 malfunction
P0202	Injector2 malfunction
P0231	Pump/Relay Open/GND
P0232	Pump/Relay Short to Battery
P0336	Crank sensor noisy signal
P0337	Crank sensor no signal
P0351	EST1 malfunction
P0500	VSS no valid signal
P0505	Idle speed control
P0562	System voltage low
P0563	System voltage high
P0601	EEPROM Checksum Error
P0650	MIL malfunction

7. CONTROLS AND PARTS FUNCTIONS

ACCESSORY SOCKET

The accessory socket (1) is attached to the left side of the dashboard. You can use the accessory socket to power a trouble light, spotlight, CB radio, or cell phone etc.

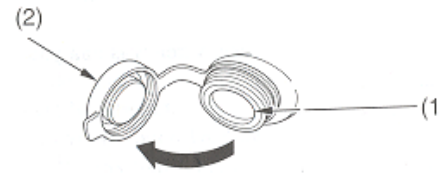

(1) accessory socket (2) cap

CAUTION

Do not plug in any heat-generating accessory such as an automobile cigarette lighter because it damages the socket.
To use the accessory socket, start the engine. Then turn the headlights OFF, and open the accessory socket cap (2).
Be sure the engine is on and the headlights are turned off before using the accessory socket, otherwise you may drain the battery.
The accessory socket rated capacity is DC 12V. 120 Watt (10A) or less. If you exceed this limit, you may blow a fuse.
When you are done using an accessory, unplug it, and cover the socket with the cap.
Be careful not to flood this accessory socket when washing your UTV.

ACCELERATOR PEDAL

WARNING

Before starting the engine, check the accelerator pedal to be sure it is operating smoothly.
Make sure the accelerator pedal fully returns to the idle position as soon as it is released.

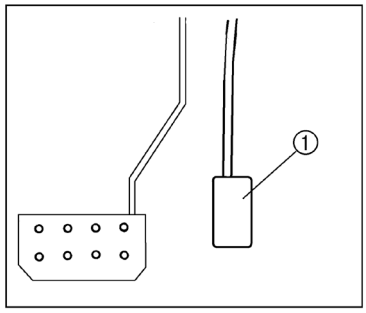

1.Accelerator pedal
Press the accelerator pedal down to increase engine speed. Spring pressure returns the pedal to the rest position when released. Always check that the accelerator pedal returns normally before starting the engine.

7. CONTROLS AND PARTS FUNCTIONS

WARNING

POTENTIAL HAZARD

Malfunction of the accelerator pedal.

WHAT CAN HAPPEN

The accelerator pedal could be hard to operate, making it difficult to speed up or slow down when you need to. This could cause an accident.

HOW TO AVOID THE HAZARD

Check the operation of the accelerator pedal before you start the engine. If it does not work smoothly, check for the cause. Correct the problem before operating the vehicle. Consult an authorized dealer if you can't find or solve the problem yourself.

BRAKE PEDAL

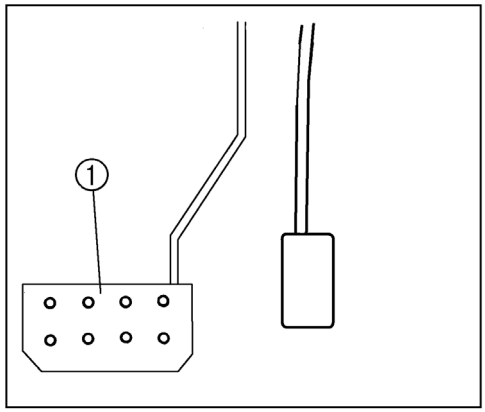

1.Brake pedal

Press the brake pedal to slow or stop the vehicle.

WARNING

Never operate the UTV with a spongy feeling brake pedal. Operating the UTV with a spongy brake pedal can result in loss of braking. Loss of braking could cause an accident.

PARKING BRAKE LEVER

The parking brake lever is located at the left hand of the steering wheel . It will help hold the vehicle from moving while parked. To set the parking brake, pull the lever up completely. The parking indicator light will come on if the ignition switch is on. To release the parking brake, pull up on the lever, press the release button, and then push the lever all the way down. Be sure to fully release the parking brake before

7. CONTROLS AND PARTS FUNCTIONS

starting out. Failure to do so may result in poor performance and premature wearing of the parking brake and V-belt.

1. Release button
2. Parking brake lever

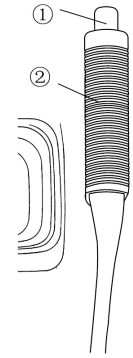

AUTOMATIC TRANSMISSION GEAR SELECTOR OPERATION

The transmission gear selector is located at the right side of the steering wheel The transmission selector lever has four positions: H drive; L drive; Neutral; Reverse.

CAUTION

To change gears, stop the vehicle and with the engine idling, move the lever to the desired gear. Shifting gears with the engine speed above idle or while the vehicle is moving could cause transmission damage.
Always place the transmission in gear with the parking brake locked whenever the vehicle is left unattended.
Maintaining shift linkage adjustment is important to assure proper transmission function. Should you experience any shifting problem contact your dealer.

7. CONTROLS AND PARTS FUNCTIONS

FUEL TANK CAP

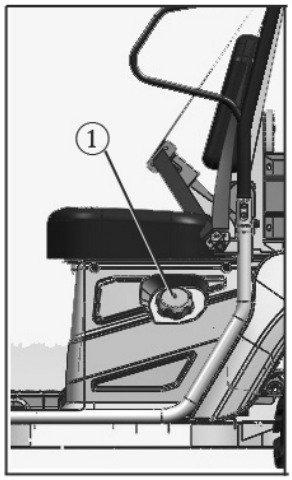

1.Fuel tank cap
Remove the fuel tank cap by turning it counterclockwise.

SEATS

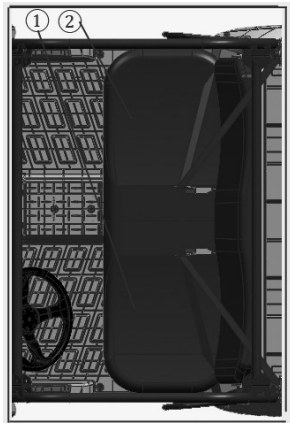

① Driver seat
② Passenger seat
To remove the seat, lift the front of the seat, and then slide the seat up and forward.
To install the seat, insert the projections on the rear of the seat into the seat holders and push down on the seat at the front.

7. CONTROLS AND PARTS FUNCTIONS

WARNING

POTENTIAL HAZARD
A loose seat.
WHAT CAN HAPPEN
The operator could lose control.
The operator or a passenger could fall if the seat is loose during operation.
HOW TO AVOID THE HAZARD
Make sure the seat is securely latched.

SEAT BELTS
This vehicle is equipped with three-point seat belts for both the operator and passenger. Always wear the seat belt while riding in the vehicle.

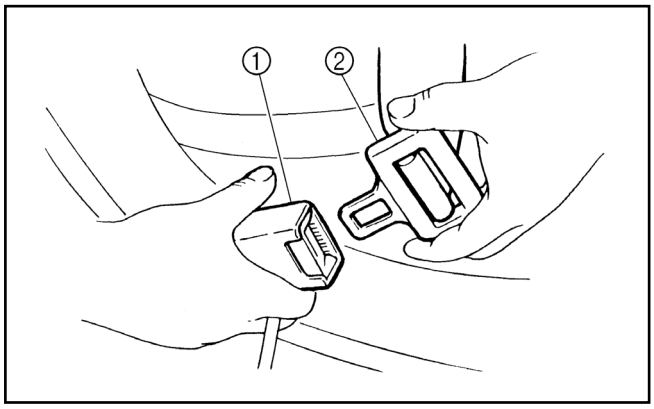

1. Buckle
2. Latch plate

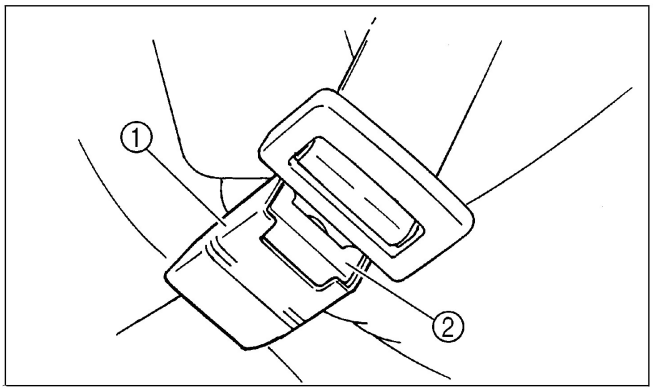

1. Buckle
2. Release button

To Wear The Seat Belt Properly, do the following:
1. Hold the latch plate as you pull the belt across your lap and chest. Make sure the

7. CONTROLS AND PARTS FUNCTIONS

belt is not twisted and is not caught on any portion of the vehicle, your clothing, or any equipment you are carrying.

2. Push the latch plate into the buckle until it clicks. Pull up on the latch plate to make sure it is secure.

3. Put the lap portion of the belt low on your hips. Push down on the buckle end of the belt as you pull up on the shoulder part so the belt is snug across your hips.

4. Position the shoulder belt over your shoulder and across your chest. The shoulder belt should fit against your chest. If it is loose, pull the belt out all the way and then let it retract.

To Release The Buckle, firmly press the release button.

⚠ WARNING

POTENTIAL HAZARD

Not wearing the seat belt.

Wearing the seat belt improperly.

WHAT CAN HAPPEN

There is increased risk of being killed or seriously injured in an accident.

HOW TO AVOID THE HAZARD

Always wear your seat belt when riding in the vehicle.

Be sure the seat belt is close-fitting across your hips and chest and is latched securely.

7. CONTROLS AND PARTS FUNCTIONS

CAUTION

To protect it from damage, do not put metal products, like tools or sharply edged products directly in the glove compartment. If they must be stored, wrap them in an appropriate cushioned material.

CARGO BED

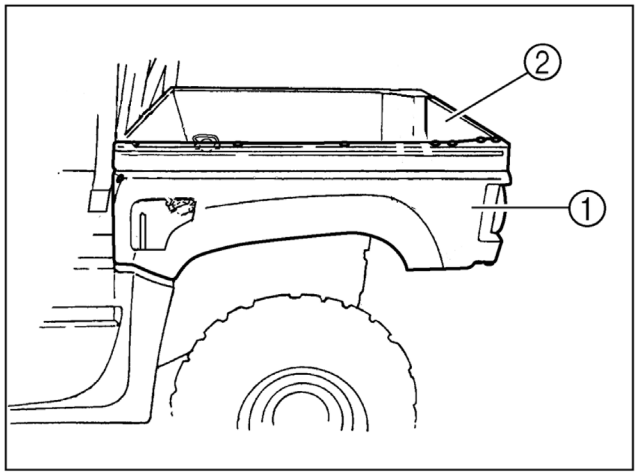

①Cargo bed
② Tailgate

Lifting And Lowering The Cargo Bed

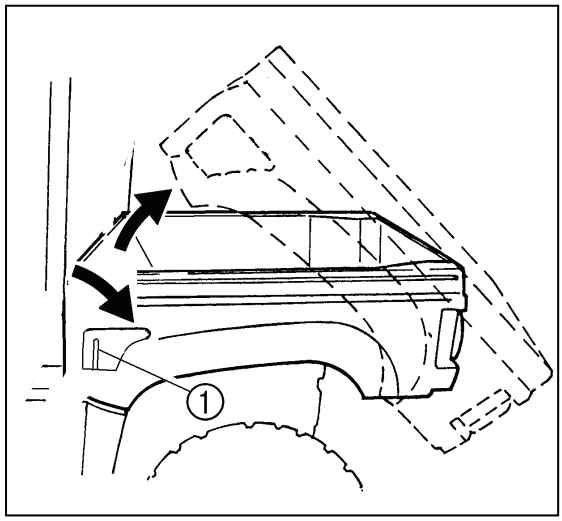

①Cargo bed release lever
To lift
Push down the cargo bed release lever on the left or right side of the vehicle, and then slowly lift up the cargo bed until it stops.
To lower
Lower the cargo bed slowly to its original position and be sure that it is locked into place.

7. CONTROLS AND PARTS FUNCTIONS

WARNING

POTENTIAL HAZARD
Pinch points.
WHAT CAN HAPPEN
You or someone else could be pinched between the cargo bed and the frame when the bed is being lowered.
HOW TO AVOID THE HAZARD
Before closing the bed, be sure others are standing away from the vehicle. Keep hands and fingers away from the pinch points between the bed and the frame.

Load Limit

Maximum load limit: 100 kg (220 lbs.)

WARNING

POTENTIAL HAZARD
Overload the cargo bed.
WHAT CAN HAPPEN
Could cause changes in vehicle handling which could lead to an accident.
HOW TO AVOID THE HAZARD
Never exceed the stated maximum load limit for this cargo bed. Cargo should be properly distributed and securely attached. Reduce speed when carrying cargo. Allow greater distance for braking.

WARNING

POTENTIAL HAZARD
Carry a passenger/ passengers in the cargo bed.
WHAT CAN HAPPEN
The passenger(s) could fall, be thrown out, or be struck by objects in the cargo bed.
HOW TO AVOID THE HAZARD
Never carry a passenger/ passengers in the cargo bed. This cargo bed is designed to carry cargo only.

TRAILER HITCH BRACKET

7. CONTROLS AND PARTS FUNCTIONS

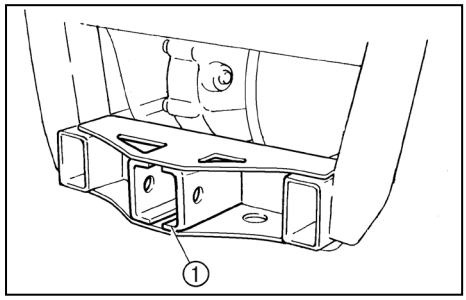

①Trailer hitch bracket
This vehicle is equipped with a receiver bracket for a standard trailer hitch.

FUEL AND OIL SYSTEM

WARNING

Gasoline is highly flammable and explosive under certain conditions.

- Always exercise extreme caution whenever handling gasoline.
- Always refuel with the engine stopped and outdoors or in a well ventilated area.
- Do not smoke or allow open flames or sparks in or near the area where refueling is performed or where gasoline is stored.
- Do not over fill the tank. Do not fill the tank neck.
- If you get gasoline on your skin or clothing, immediately wash it off with soap and water and change clothing.
- Never start the engine or let it run in an enclosed area. Gasoline powered engine exhaust fumes are poisonous and can cause loss of consciousness and death in a short time.

WARNING

The engine exhaust from this product contains chemicals known, in certain quantities, to cause cancer, birth defects or other reproductive harm.

Recommended Fuel: Unleaded Gasoline Only
Fuel tank capacity:18.0 L (3.96 Imp gal, 4.76 US gal)

CAUTION

Use only unleaded gasoline. The use of leaded gasoline will cause severe damage to internal engine parts, such as the valves and piston rings, as well as to the exhaust system.

7. CONTROLS AND PARTS FUNCTIONS

Use 90 octane or higher gasoline.

Fuel filter

The filter should be replaced by your dealer every 100 hours of operation or annually. Do not attempt to clean the fuel filter.

Oil System

① Dipstick

The oil level dipstick is located on the right side of the engine.
To check the oil:

1. Set machine on a level surface.
2. Start the engine and let it idle for 20-30 seconds.
3. Stop the engine, remove the dipstick and wipe it dry with a clean cloth.
4. Put the dipstick into the oil filler (don't screw in it), remove it and read the oil level.
5. Remove dipstick and check to see that the oil level is between the full and add marks. Add oil as indicated by the level on the dipstick. Do not overfill.

CAUTION

Use only SAE 15W/40, SG OIL. Never substitute or mix oil brands. Serious engine damage and voiding of warranty can result.

8. STARTING THE ENGINE

Procedure for Starting a Cold Engine

WARNING

Never run an engine in an enclosed area. Carbon monoxide exhaust gas is poisonous and can cause severe injury or death. Always start engines outdoors.

WARNING

POTENTIAL HAZARD
Freezing control cables in cold weather.
WHAT CAN HAPPEN
You could be unable to control the vehicle, which could lead to an accident or collision.
HOW TO AVOID THE HAZARD
When riding in cold weather, always make sure all control cables work smoothly before you begin riding.

CAUTION

You must allow your vehicle adequate warm up time before operating or engine damage could result.

---

1. Apply the brake.

2. Shift the drive select lever into the neutral position.

NOTE: When the drive select lever is in the neutral position, the neutral indicator light should come on. If the neutral indicator light does not come on, ask a dealer to inspect the electric circuit.
The engine can be started in any gear if the brake is applied. However, it is recommended to shift into neutral before starting the engine.

3. With your foot off the accelerator pedal, start the engine by turning the key to "START".

NOTE: If the engine fails to start, release the key, and then try starting again. Wait a few seconds before the next attempt. Each cranking

should be as short as possible to preserve battery energy. Do not crank the engine more than 5 seconds on each attempt.

Jump-starting

Jump-starting the vehicle should be avoided. The battery should be removed and charged instead. However, if the vehicle must be jump started, proceed as follows.

1. Turn the key to "OFF".
2. Open the hood.
3. Using a charged 12 V battery, connect the positive lead of the jumper cable to the positive terminal of the battery in the vehicle and the other end of the positive lead to the positive terminal of the charged battery.

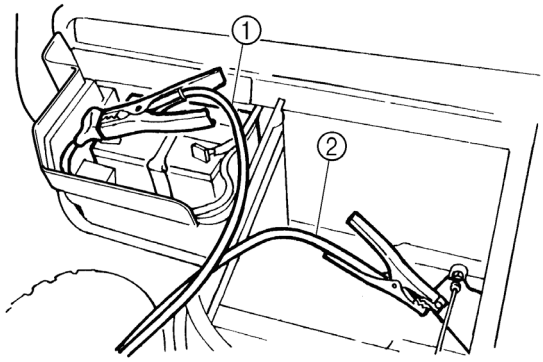

1. Jumper cable positive lead 2. Jumper cable negative lead

5. Connect the negative lead of the jumper cable to the negative terminal of the charged battery and the other end of the negative lead to an unpainted metal surface of the vehicle.
6. Start the engine.
7. After the engine starts, disconnect the negative lead of the jumper

cable from the vehicle and charged battery, and then disconnect the positive lead of the jumper cable from the charged battery and the battery in the vehicle.

8. Close the hood.

WARNING

If the hood latches are hooked improperly, or the latches and their attachments cannot work properly, the front hood can come off during operation, striking the driver or passenger and causing serious personal injury.

9. VEHICLE BREAK-IN PERIOD

The break-in period for your new UTV is defined as the first 50 hours of operation. No single action on your part is as important as a proper break-in period. Careful treatment of new engine will result in more efficient performance and longer life for the engine. Perform the following procedures carefully.

CAUTION

Do not operate at full throttle or high speeds for extended periods during the break-in period. Excessive heat can build up and cause damage to close fitted engine parts.

1. Fill fuel tank.
2. Check oil reservoir level indicated on dipstick. Add oil if necessary.
3. Drive slowly at first. Select an area which is open and will give you room to familiarize yourself with vehicle operation and handling.
4. Vary the throttle positions. Do not operate at sustained idle.
5. Perform regular checks on fluid levels, controls and all important areas on the vehicle as outlined earlier on the daily pre-ride inspection checklist found in" 4.daily pre-ride inspection ".
6. Don't pull loads.
7. Break-in oil and filter. Change at 20 hours or 500 miles/800km.

10. RIDING WEAR

SAFE RIDING WEAR

Always wear clothing suite to the type of riding you are doing. UTV riding requires special protective clothing which will make you feel more comfortable and reduce chances of injury.

1. Helmet

Your helmet is the most important piece of protective gear for safe riding. A helmet can prevent a severe head injury.

Select an approved off-road motorcycle -type helmets that fit properly.

2. Eye Protection

A pair of goggles or helmet face should offer the best protection for your eyes.

3. Gloves (off-road style)

4. Boots

A pair of strong over the calf type boots with heels, such as motocross boots.

5. Clothing

To protect your body, long sleeves and pants should always be worn. Riding pants with kneepads, a jersey and shoulder pads provide the best protection.

10. RIDING WEAR

WARNING

POTENTIAL HAZARD

Operate this vehicle without wearing an approved motorcycle helmet, eye protection, and protective clothing.

WHAT CAN HAPPEN

Operating without an approved motorcycle helmet increases your chances of a severe head injury or death in the event of an accident.

Operating without eye protection can result in an accident and increases your chances of a severe injury in the event of an accident.

HOW TO AVOID THE HAZARD

Always wear an approved motorcycle helmet that fits properly. You should also wear: eye protection (goggles or face shield), gloves, boots, long-sleeved shirt or jacket long pants.

11. CARRYING LOADS

CARRYING LOADS

Cargo or a trailer can change the stability and handling of a vehicle.

You must use common sense and good judgment when carrying cargo or towing a trailer. Keep the following points in mind:

- Never exceed the weight limits shown. An overloaded vehicle can be unstable.

MAXIMUM LOADING LIMIT
Cargo bed: 100 kg (220lbs.)
Trailer hitch:
Pulling load (total weight of trailer and cargo): 200 kg (440 lbs.)
Tongue weight (vertical weight on trailer hitch point): 11 kg (24 lbs.)

- Choose a trailer hitch drawbar designed for use with a 5 cm (2 in) receiver.
- Load cargo in the cargo bed as close to the center of the vehicle as possible and tie it down using the cargo hooks equipped on the cargo bed.
- Tie down cargo securely in the trailer. Make sure cargo in the trailer cannot move around. A shifting load can cause an accident.
- Make sure the load does not interfere with the controls or your ability to see where you are going.
- Drive more slowly than you would without a load. The more weight you carry, the slower you should go. Although conditions vary, it is good practice not to exceed low range whenever you are carrying heavier loads or when towing a trailer.
- Allow more braking distance. A heavier vehicle takes longer to stop.
- Avoid making sharp turns unless at very slow speeds.
- Avoid hills and rough terrain. Choose terrain carefully. Added weight affects the stability and handling of the vehicle.

11. CARRYING LOADS

WARNING

POTENTIAL HAZARD
Overloading this vehicle or carrying or towing cargo improperly.
WHAT CAN HAPPEN
Could cause changes in vehicle handling which could lead to an accident.
HOW TO AVOID THE HAZARD
Never exceed the stated load capacity for this vehicle. Cargo should be properly distributed and securely attached. Reduce speed when carrying cargo or pulling a trailer. Allow greater distance for braking.

WARNING

POTENTIAL HAZARD
Carry a passenger in the cargo bed.
WHAT CAN HAPPEN
The passenger could fall or be struck by objects in the cargo bed.
HOW TO AVOID THE HAZARD
Never carry a passenger in the cargo bed. The cargo bed is designed to carry cargo only.

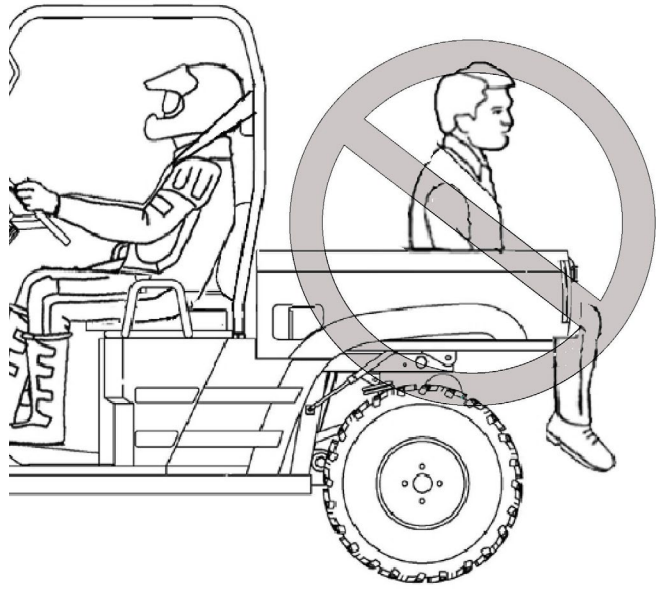

12. DRIVING YOUR VEHICLE

GETTING TO KNOW YOUR VEHICLE

This off-highway utility vehicle will handle and maneuver differently from an ordinary passenger car or other vehicle. Before you begin to use your vehicle, be sure you have read this Owner's Manual completely and understand the operation of the controls. Pay particular attention to the safety information. Please also read all caution and warning labels on your vehicle. This vehicle is designed for the operator and one passenger. The driver and passenger must always wear a seat belt. Never carry passengers in the cargo bed.

WARNING

POTENTIAL HAZARD

Not wearing the seat belt.

Wear the seat belt improperly.

WHAT CAN HAPPEN

There is increased risk of being killed or seriously injured in an accident.

HOW TO AVOID THE HAZARD

Always wear your seat belt when riding in the vehicle. Be sure the seat belt is close-fitting across your hips and chest and is latched securely.

WARNING

The engine rpm limiter works at 7500 rpm, this may cause excessive fuel to build in the exhaust, and ignited by the catalyst in the muffler, MAY RESULT IN THE MUFFLERS OVERHEATING AND FIRE RISK. Always reduce throttle when the engine reach top rpm, avoid the engine popping.

WARNING

You must inspect you UTV each time before riding to ensure it is in proper working order. If proper inspection is not done, severe injury or death could result.

See"4.DAILY PRE-RIDE INSPECTION"

LEARNING TO OPERATE YOUR VEHICLE

You should become familiar with the performance characteristics of the vehicle in a large, flat area that is free of obstacles and other vehicles. Practice control of the

12. DRIVING YOUR VEHICLE

accelerator pedal, brakes, steering, and drive select lever. Drive first at slow speed and become comfortable at that speed before gradually increasing your speed. Become familiar with the way the vehicle feels in low and high ranges, Also practice driving in reverse. Take the time to learn basic operation before attempting more difficult maneuvers.

1. Set the parking brake, shift to neutral, and follow the instructions to start the engine.
2. With the engine idling, shift the drive select lever into driven position. Then release the parking brake.
3. Press the accelerator pedal slowly and smoothly. The centrifugal clutch will engage and you will start to accelerate. Avoid higher speeds until you are thoroughly familiar with the operation of your vehicle.
4. When slowing down or stopping, take your foot off the accelerator pedal and smoothly press the brake pedal. Improper use of the brakes can cause the tires to lose traction, reducing control and increasing the possibility of an accident.

MAKING TURNS

It is possible for the vehicle to roll over or go out of control if you attempt sharp, high-speed turns. You should also be careful making sharp turns on rough terrain. Do not attempt to turn around or make abrupt maneuvers on slopes.

Position your hands on the steering wheel so that your thumbs and fingers do not wrap around the wheel. This is particularly important when driving in rough terrain. The front wheels will move right and left as they respond to the terrain, and this movement will be felt in the steering wheel. A sudden jolt could wrench the steering wheel around, and your thumbs or fingers could be injured if they are in the way of the steering wheel spokes.

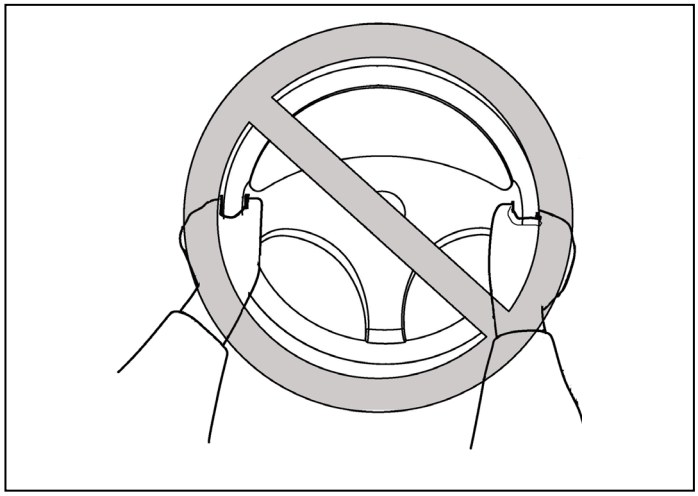

12. DRIVING YOUR VEHICLE

BRAKING

Braking ability is affected by the type of terrain. In most cases, gradually application of the brakes is more effective than abrupt braking, particularly on loose surfaces like gravel. Always allow for greater braking distance on rough, loose, or slippery surfaces.

GOING UPHILL

Do not attempt to climb hills until you have mastered basic maneuvers on flat ground. Use proper driving techniques to avoid overturns on hills and slopes. Drive straight up hills, and avoid crossing the side of a hill, which increases your chance of rollover. Practice first on gentle slopes before attempting steeper hills. Always check the terrain carefully before attempting any hill. Use common sense and remember that some hills are too steep for you to climb.

Choose carefully which hills you attempt to climb. Avoid hills with slippery surfaces or ones where you will not be able to see far enough ahead of you.

WARNING

POTENTIAL HAZARD

Operate on excessively steep hills.

WHAT CAN HAPPEN

The vehicle can overturn more easily on extremely steep hills than on level surfaces or small hills.

HOW TO AVOID THE HAZARD

Never operate your vehicle on hills too steep for it or your abilities. Never operate vehicles on hills steeper than 15%. Do not drive across the face of a hill. Go straight up the hill. Practice on smaller hills before attempting large hills.

GOING DOWNHILL

Check the terrain carefully before going down a hill. When possible, choose a path that lets you drive your vehicle straight downhill. Avoid sharp angles that could allow the vehicle to pitch or roll over. Carefully choose your path and drive no faster than you will be able to react to obstacles that may appear.

WARNING

POTENTIAL HAZARD

Go down a hill improperly.

WHAT CAN HAPPEN

12. DRIVING YOUR VEHICLE

Could cause loss of control or cause the vehicle to overturn.

HOW TO AVOID THE HAZARD

Always check the terrain carefully before you start down any hill. Never go down a hill at high speed. Avoid going down a hill at an angle that would cause the vehicle to lean sharply to one side.

Go straight down the hill where possible.

WARNING

POTENTIAL HAZARD

Try to stop the tipping vehicle with your arm or leg.

WHAT CAN HAPPEN

You could be severely injured. You could suffer a crushed hand, arm, leg, or foot.

HOW TO AVOID THE HAZARD

You must keep your arms and legs inside the vehicle until it has stopped moving.

As with any off-road-capable vehicle, there is a risk of tipping over or rollover under certain conditions. Uneven terrain or slopes which pitch the vehicle sideways, turning too fast or sharp, or a combination of conditions increase the risk of tipping over.

If you are in a situation where the vehicle is tipping over, do not put your arm or/ and leg outside the vehicle, do not try to stop tipping with your arm or leg. You could be severely injured. You could suffer a crushed hand, arm, leg, or foot, if part of your body is caught underneath the vehicle.

CROSSING THROUGH SHALLOW WATER

If you must cross shallow, slow moving water up to 200mm (8 in) depth, choose your path carefully to avoid sharp drop-offs, large rocks, or slippery surfaces that could cause the vehicle to overturn. Never operate through water deeper than 200mm (8 in) or fast flowing water. Wet brakes may have reduced effectiveness. After leaving the water, test your brakes. If necessary, apply the brakes several times to let friction dry out the linings.

NOTE: After running the vehicle in water, it is critical your machine is serviced as outlined in the maintenance chart see "16.maintenance".The following areas need special attention: engine oil, transmission oil, rear gear case, and all grease fittings.

12. DRIVING YOUR VEHICLE

WARNING

POTENTIAL HAZARD
Operate this vehicle through deep or fast-flowing water.
WHAT CAN HAPPEN
Losing of control could result in an accident including overturn, which could increase the risk of drowning.
HOW TO AVOID THE HAZARD
Never operate this vehicle in fast flowing water or in water deeper than 200 mm (8 in). Remember that wet brakes may have reduced stopping ability. Test your brakes after leaving water. If necessary, apply them several times to let friction dry out the linings.

RIDING OVER ROUGH TERRAIN
Operating over rough terrain should be done with caution. Look for obstacles that could cause damage to the vehicle or could lead to a rollover or accident. Avoid jumping the vehicle as injury, loss of control, and damage to the vehicle could occur.

WARNING

POTENTIAL HAZARD
Fail to use extra care when operating this vehicle on unfamiliar terrain.
WHAT CAN HAPPEN
You can come upon hidden rocks, bumps, or holes, without enough time to react. Could result in the vehicle overturning or go out of control.
HOW TO AVOID THE HAZARD
Go slowly and be extra careful when operating on unfamiliar terrain. Always be alert to changing terrain conditions when operating the vehicle.

RIDING IN BRUSH OR WOODED AREAS
When operating in areas with brush or trees, watch carefully on both sides and above the vehicle for obstacles such as branches that the vehicle might hit, causing an accident, or for brush that might enter the vehicle as you pass and strike the driver or passenger. Never hold onto the enclosure so your hand is outside the vehicle. Hold only onto the handgrip inside the enclosure.

ENCOUNTERING OBSTACLES ON THE TRAIL
If you cannot go around an obstacle such as a fallen tree trunk or a ditch, stop the

12. DRIVING YOUR VEHICLE

vehicle where it is safe to do so. Set the parking brake and get out to inspecting the area thoroughly. Look from your approach side and the exit side. If you believe you can continue safely, decide the path that will allow you to get over the obstacle at as close to a right angle as possible to minimize vehicle tipping. Go only fast enough to maintain your momentum but still give yourself plenty of time to react to changes in conditions. If there is any question about your ability to maneuver safely over the obstacle, you should turn around if the ground is flat and you have the room, or back up until you find a less difficult path.

WARNING

POTENTIAL HAZARD
Improperly operating over obstacles
WHAT CAN HAPPEN
Could cause loss of control or a collision.
Could cause the vehicle to overturn.
HOW TO AVOID THE HAZARD
Before operating in a new area, check for obstacles. Use extreme caution when operating over large obstacles, such as large rocks or fallen trees.

PARKING
When parking, stop the engine and shift the drive select lever into the neutral position. Apply the parking brake to help prevent the vehicle from rolling.

Parking on a slope
1. Bring the vehicle to a stop by applying the brakes.
2. Stop the engine.
3. With the brakes applied, setting the parking brake.

WARNING

POTENTIAL HAZARD
Park on a hill or other inclines.
WHAT CAN HAPPEN
The vehicle could roll out of control, increasing the chance of an accident.
HOW TO AVOID THE HAZARD
Avoid parking on hills or other inclines. If you must park on an incline, apply the

12. DRIVING YOUR VEHICLE

parking brake, and block the front and rear wheels with rocks or other objects. Do not park the vehicle at all on hills that are so steep you could not walk up them easily.

SHIFTING THE TRANSMISSION

CAUTION, when driving this vehicle make sure to run the engine at a high enough speed to keep the clutch fully engaged. The clutch engages at 2400 RPM and your vehicle should be run at this speed or higher to prevent slipping and damage to the clutch and drive belt.

- When operating your vehicle at a low speed for an extended period of time, it is best to use the Low range in the transmission. In Low range, the vehicle will be limited to 7 - 10 mph. You should not try to exceed this speed in Low range.

- When running your higher at higher vehicle speeds, you should use the high range on the transmission.

- When shifting the transmission on this vehicle, always come to a FULL STOP with the engine at idle.

- The transmission on this vehicle uses a transfer case to achieve the High and Low ranges for driving. It is not a 2-speed transmission and must not be shifted when the vehicle is moving.

FAILURE TO FOLLOWING THESE INSTRUCTIONS CAN CAUSE DAMAGE TO THE TRANSMISSION, BELT DRIVE, AND OTHER COMPONENTS OF YOUR VEHICLE, AND WILL VOID THE WARRANTY.

13. CVT SYSTEM

WARNING

The CVT system rotates at high speeds, and is created large amounts of force on clutch components.

Do not modify any components of the CVT system. Any modification will damage the system; cause the system to be out of balance,

The CVT housing must be securely in place during operation,

Failure to comply with this warning can result in severe injury or death.

CVT SYSTEM

On UTV, the approximate gear ratio difference between high and low range is about 50%.This difference in gearing affects the operation of the CVT, especially at speeds less than 7 MPH, due to the system's dependence on engine speed.
If the UTV is loaded or climbed the slope at low speed, use low gear.

14. BATTERY

WARNING

Whenever removing the battery, disconnect the negative (black) cable first. When reinstalling the battery, connect the negative (black) cable last. Otherwise, an explosive situation could result causing serious injury or death.

WARNING

Battery electrolyte is poisonous. It contains sulfuric acid. Serious burns can result from contact with skin, eyes or clothing. Antidote:
External: Flush with water.
Internal: Drink large quantities of water or milk. Follow with milk of magnesia, beaten egg, or vegetable oil. Call physician immediately.
Eyes: Flush with water for 15 minutes and get prompt medical attention.
Batteries produce explosive gases. Keep sparks, flame, cigarettes, etc. away. Ventilate when charging or using in an enclosed space. Always shield eyes when working near batteries. **KEEP OUT OF REACH OF CHILDREN.**

Battery Removal

1. Disconnect hold down straps holding the battery to the battery box.
2. Disconnect the black (negative) battery cable first.
3. Disconnect the red (positive) battery cable next.
4. Lift the battery out of the UTV, being careful not to tip it sideways and spill electrolyte.

CAUTION

If electrolyte spills, immediately wash it off with a solution of one tablespoon baking soda and one cup water to prevent damage to the UTV.

Battery Installation and Connections

WARNING

To avoid the possibility of explosion, always connect battery cables in the order specified. Red (positive) cable first; black (negative) cable last. An exploding battery

14. BATTERY

can cause serious injury or death.

WARNING

Battery terminals and connections should be kept free of corrosion.
If cleaning is necessary, remove the corrosion with a stiff wire brush. Wash with a solution of one tablespoon baking soda and one cup water. Rinse well with tap water and dry off with clean rags. Coat the terminals with dialectic grease or petroleum jelly. Be careful not to allow cleaning solution or tap water into the battery.

1. Set the battery in its holder.
2. First connect and tighten the red (positive) cable.
3. Second connect and tighten the black (negative) cable.
4. Attach the hold down straps.
5. Verify that cables are properly routed.

NOTE:

- When your UTV is placed in storage for one month or more, the battery should be removed, charged to proper level, and stored in a cool, dry place.
- Before reusing, take the battery to your dealer for testing and recharging.

Power plug leads may need to be bent down so that battery cover may be installed.

- When installing a new battery, make certain it is fully charged prior to it is initial use. Using a new battery that has not been fully charged can damage the battery resulting in a shorter battery life, it can also hinder vehicle performance.

CAUTION

Your UTV is equipped with a 9Ah Battery. This may not be sufficient to provide power for optional equipment. When installing optional equipment please upgrade your battery as necessary. See your dealer for the proper battery.

15. EXHAUST SYSTEM

SYSTEM REGULATION

TAMPERING WITH NOISE CONTROL SYSTEM PROHIBITED!

CAUTION: Exhaust system components are very hot during and after use of UTV.

- Do not touch exhaust system components. Serious burns can result.
- Be especially careful when traveling through tall grass. The potential for fire exists

Spark Arrestor

The exhaust pipe must be periodically purged of accumulated carbon as follows:

1. Remove the arrestor screw ① located on the bottom of the muffler, pull out the arrestor (the mesh) ②.
2. Clean the arrestor or replace it.

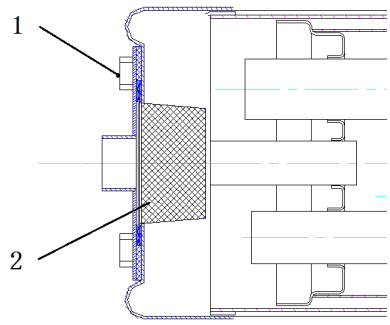

WARNING

When cleaning the spark arrestor, you must follow the safe guards listed below to avoid serious injury.

- Do not perform this operation immediately after the engine has been run because the exhaust system becomes very hot.
- Keep combustible materials away from exhaust system. Fire may result.

Catalyst

There is catalyst inside the muffler on all models .

15. EXHAUST SYSTEM

WARNING

The engine rpm limiter will work at 7500rpm, this may cause excessive fuel to build in the exhaust, and ignited by the catalyst in the muffler, MAY RESULT IN THE MUFFLERS OVERHEATING AND FIRE RISK.

Always reduce throttle when the engine reach top rpm, avoid the engine popping.

WARNING

The engine exhaust from this product contains chemicals known, in certain quantities, to cause cancer, birth defects or other reproductive harm.

16. MAINTENANCE

CAUTION

Plan of Maintenance for UTV

To keep the performance good, the motorcycle should be checked and maintained at certain interval. The meanings of capital in following table are:

I: Inspection, including check, clean, lubricate, refuel, repair or replacing if necessary.

A: Inspection, adjusting if necessary C: Cleaning R: Replacing L: Lubricate

Maintenance period / Items	Odometer (km)						
	750	3000	6000	9000	12000	15000	Everyday check before riding
**Re-seating Valve		I	I	I	I	I	
**Spark Plug		I	R	I	R	I	
**Fuel System		I	I	I	I	I	
*Engine Oil	R	R	R	R	R	R	I
*Valve Gap		A	A	A	A	A	
*Idle Speed		A	A	A	A	A	
*Engine Bolt		I	I	I	I	I	
*Gear Oil		R	R	R	R	R	
*Fuel Filter		R	R	R	R	R	
*Air Cleaner		C	R	C	R	C	
*Drive Bel		I\L	I\L	I\L	I\L	I\L	
*Cooling System		I	I	I	I	I	
Engine Mount		I	I	I	I	I	
Fuel Line		I	I	I	I	I	
Throttle Operation		I	I	I	I	I	
Brake Shoes/Pad Wear		I	I	I	I	I	
Brake System		I	I	I	I	I	
Brake Light Switch		I	I	I	I	I	
Brake Liquid		I	I	I	I	I	
Clutch		I	I	I	I	I	
Suspension		I	I	I	I	I	
Nuts, Bolts, Fasteners		I	I	I	I	I	
Wheel/Trye		I	I	I	I	I	
Steering System		I	I	I	I	I	

16. MAINTENANCE

The following items should be checked occasionally for tightness; or if they have been loosened for maintenance service.

WHEEL NUT TORQUE SPECIFICATIONS

Bolt Size	Specification	
M12X1.25	50Ft.Lbs	69N.m

NOTE: All nuts that have a cotter pin installed must be serviced by an authorized Dealer.

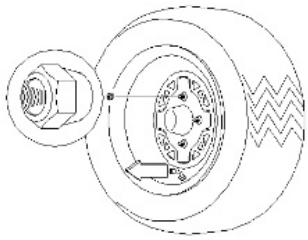

Rear Tapered nuts: install with tapered side against wheel.

AXLE BOOTS

- Front Shaft Boots.
- Rear Axle (CV Joints,) Boots.

Check the protective boots for holes or tears. If any damage is found, have them replaced by an authorized dealer.

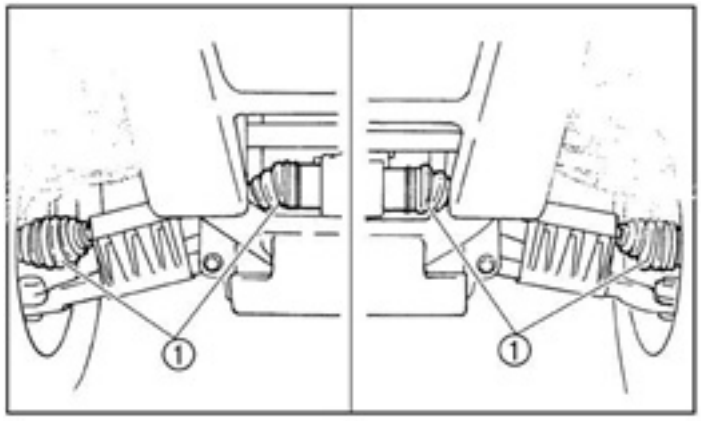

16. MAINTENANCE

REAR SPRING ADJUSTMENT

The rear shock absorber spring is adjusted by rotating the adjuster in the direction required to increase or decrease spring tension.

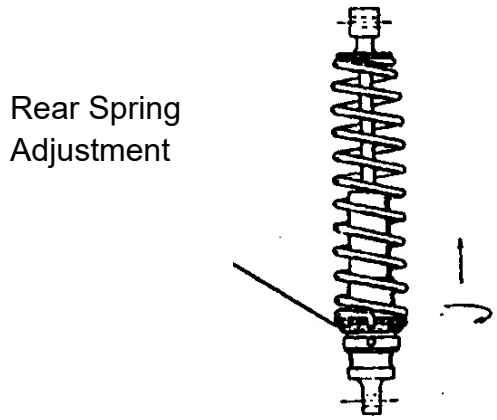

AIR FILTER SERVICE

1. Lift the cargo bed. (See 7. CONTROL AND PARTS FUNCTIONS in this manual for bed lifting and lowering.)
2. Remove the screws and remove Cover.
3. Loosen clamp and remove Filter.
4. Remove fabric type pre-filter from main filter. Wash pre-filter in soapy water and dry it.
5. Reinstall pre-filter over main filter. Replace main filter as required.
6. Reinstall filter into air box and tighten clamp. Do not over tighten clamp or filter damage may occur.

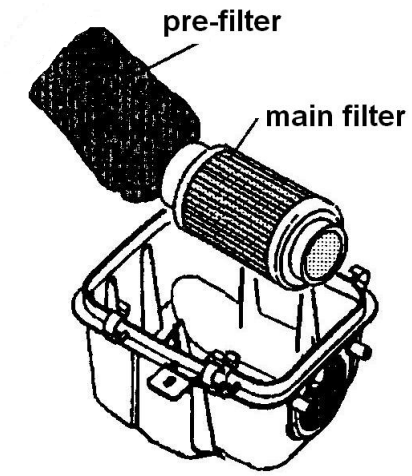

16. MAINTENANCE

STEERING

Steering Inspection

The steering assembly of the machine should be checked periodically for loose nuts and bolts, worn tie rod ends, worn boots, and damage. Checking routing of all cables, hoses, and wiring to be sure the steering mechanism is not restricted or limited. If any found, have your dealer repair them before riding your vehicle.

The steering assembly should be also checked periodically for free operation, steering should move freely through entire range of travel without binding. Park on level ground. Turn the steering wheel right and left. Check for excessive free play, abnormal noises, or a rough feeling. Have an authorized dealer repair as necessary for proper operation.

Lubricate the pivoting parts.

Recommended lubricant:
Lithium-soap-based grease

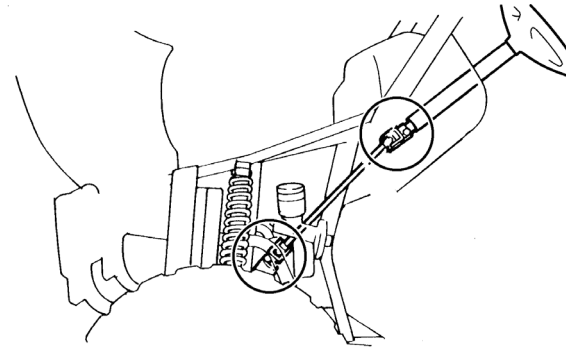

CAMBER AND CASTER

The camber and caster are non-adjustable.

16. MAINTENANCE

TOE ALIGNMENT CHECK

WARNING

Do not attempt to adjust the tie rod for toe alignment. Severe injury or death can result from improper adjustment.
Contact your dealer. He/she has the training and tools to Make these adjustment.

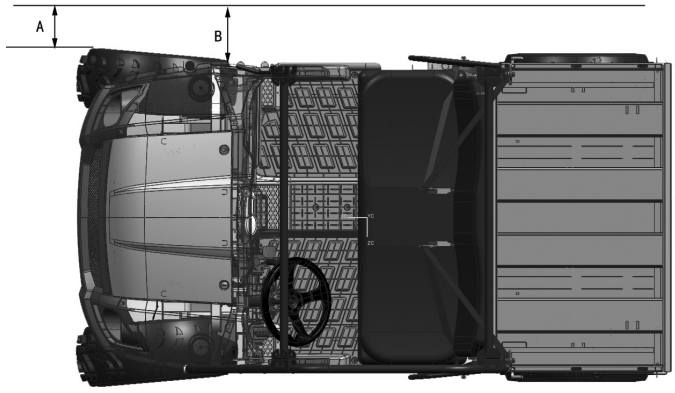

The recommended toe alignment is 1/8"to 1/4"(3to6mm) toe out.

1. Set the steering wheel in a straight ahead position and hold them in this position.
2. Measure A and B, A minus B should be 1/16" to 1/8" (1.5 ～ 3mm).
3. If this measurement needs to be adjusted, contact your dealer for service.

WARNING

If the tie rod is positioned incorrectly or adjusted incorrectly, it will not pivot, may break, and may separate. Severe injury or death can result

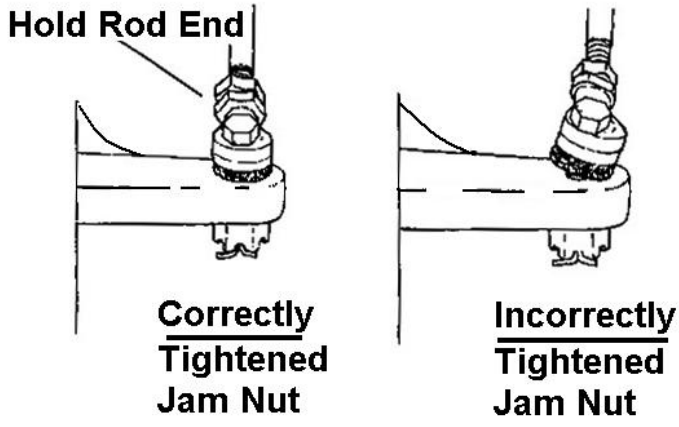

16. MAINTENANCE

BRAKES

Front brake

WARNING

Once a bottle of brake fluid is opened, use what is necessary and discard the rest. Do not store or use a partial bottle of brake fluid. Brake fluid is hygroscopic, meaning it rapidly absorbs moisture from the air. This causes the boiling temperature of the brake fluid to drop, which can lead to early brake fade and the possibility of serious injury.

The front brake is hydraulic disc brakes which is depressing the brake pedal. These brakes are self-adjusting and require no adjustment.

The following checks are recommended to keep the brake system in good operating condition. How often they need checking depends upon the type of driving that has been done.

- Keep fluid level in the master cylinder reservoirs as described see "7.Control and part functions". Normal functioning of the diaphragm is to extend into the reservoir as fluid lever drops. If the fluid lever is low and the diaphragm is not extended, a leak is indicated and the diaphragm should be replaced. Always fill the reservoir as indicated whenever the cover is loosened or removed to insure proper diaphragm operation. Use DOT 3 brake fluid.
- Check brake system for fluid leaks. Check brake for excessive travel or spongy feel.
- Check friction pads for wear, damage and loosened.
- Check security and surface condition of the disc.
- Pads should be changed when friction material is worn to 3/64"(1mm).(A)

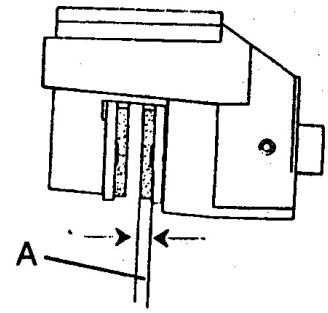

Rear Brake

- The rear brake is a hydraulic disc type brake which is activated by the same pedal which activates the front brake system is self-adjusting and requires no maintenance other than periodic checks of the pads for wear
- Pads should be changed when the friction material is worn to 3/64"(1mm).
- Inspect the brake disc and pad wear surface for excessive wear.

16. MAINTENANCE

Checking the brake fluid level

Insufficient brake fluid may let air enter the brake system, possibly causing the brakes to become ineffective. Before riding, check that the brake fluid is above the minimum level mark and replenish if necessary. A low brake fluid level may indicate worn brake pads and/or brake system leakage. If the brake fluid level is low, be sure to check the brake pads for wear and the brake system for leakage.

The brake fluid reservoir is located under the hood.

- When checking the fluid level, make sure the top of the brake fluid reservoir is level.
- Use only the recommended quality brake fluid. Otherwise, the rubber seals may deteriorate, causing leakage and poor braking performance.

Recommended brake fluid: DOT 3

- Refill with the same type of brake fluid. Mixing fluids may result in a harmful chemical reaction and lead to poor braking performance.
- Be careful that water does not enter the brake fluid reservoir when refilling. Water will significantly lower the boiling point of the fluid and may result in vapor lock.
- Brake fluid may deteriorate painted surfaces or plastic parts. Always clean up spilled fluid immediately.
- Have an authorized dealer inspect the brake system if the brake fluid level goes down.

Brake pedal and accelerator pedal lubrication

Lubricate the pivoting parts.

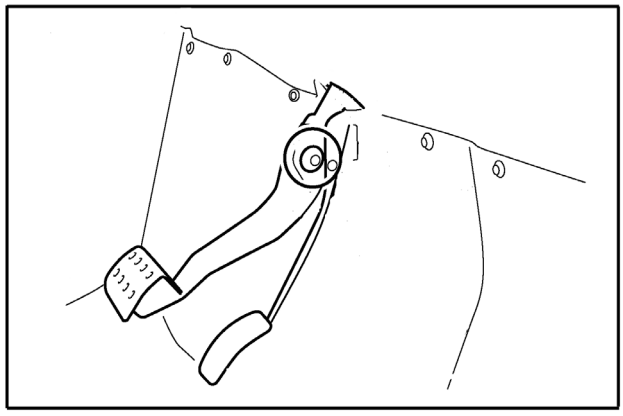

Recommended lubricant:
Lithium-soap-based grease
(all-purpose grease)

16. MAINTENANCE

PARKING BRAKE

Checking

Although the parking brake has been adjusted at the factory, the brake should be checked for proper operation. The mechanical brake must be maintained to be fully functional.

1. With the engine off, apply the parking brake lever and attempt to move the UTV.
2. If the rear wheels are locked, it is adjusted properly.
3. If the wheels are not locked, it must be adjusted.
4. The maximum free play is equal to one click of the parking brake lever. If necessary, adjust the free play as follows.

Adjusting

To adjust (set up) the mechanical parking brake, use the following procedure

Note: The adjusting on the caliper is for the wear out of the pads.

1. With the engine off, loosen the adjustor on the lever.
2. Loosen the nut of the adjuster on the caliper.
3. Turn the adjuster (bolt) CW (clockwise) by hand till the pad touch the brake disc, turn the adjuster bolt CCW (counterclockwise) by 1/4 to one turn for 10 to 20mm free play at the end of the parking lever.
4. Tighten the nuts securely against the adjusters.
5. Make sure the rear wheels turns freely without dragging.
6. Turn the adjustor (the one on the lever) and apply the lever. While adjusting, it is important you apply the lever back and forth for operation, free play and the locking of the parking position.
7. Make sure the rear wheels turns freely without dragging and parking brake works properly.
8. Field test for parking. It must be capable of holding the laden UTV stationary on an 18% up and down gradient.

CAUTION

Don't over tighten the adjustor. The maximum free play is equal to one click of the parking brake lever.

A temporary adjusting can also be done to the brake cable on the parking lever side by turn the adjuster (nut) directly. But the adjust range is limited. Always do the **procedure 1 to 8** when necessary.

16. MAINTENANCE

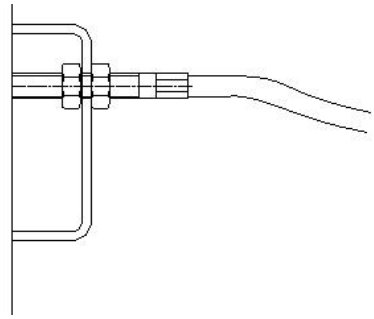

Parking Brake Indicator (light) Switch Adjustment

The parking indicator switch, which is activated by the parking lever, is properly adjusted when the indicator light comes on just before braking takes effect. If necessary, adjust the parking indicator switch as follows.

1. Open the hood. (See 7. CONTROL AND PARTS FUNCTIONS in this manual for hood opening and closing procedures.)
2. Turn the adjusting nut in or out to make the light come on properly, then lock the lock nut .
   (all-purpose grease)

ENGINE IDLE RPM ADJUSTMENT

Throttle Free Play Inspection

1. Apply the parking brake.
2. Put gear in Neutral position.
3. Start the engine, and warm it up thoroughly.
4. Measure the distance the throttle pedal moves before the engine begins to pick up seep. Free play should be 1/16" to 1/8" (1.5-3mm).

Throttle Free Play Adjustment

Throttle cable free play is adjusted at the cable, under the passenger seat.

1, Slide the boots off. Loosen adjuster locknut.

2, Turn adjuster until 1/16" to 1/8" (1.5 to 3mm) free-play is achieved at the throttle pedal.

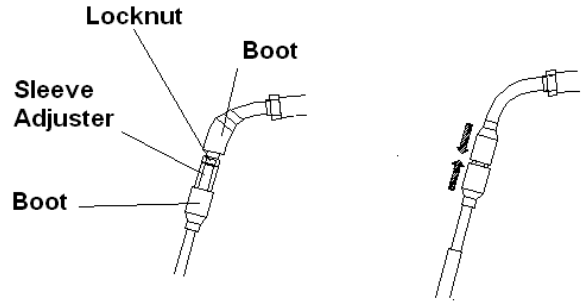

NOTE: While adjusting free play, it is important you flip the throttle pedal back

16. MAINTENANCE

and forth.
3, Tighten locknut and slide boots over cable adjuster.

SPARK PLUGS

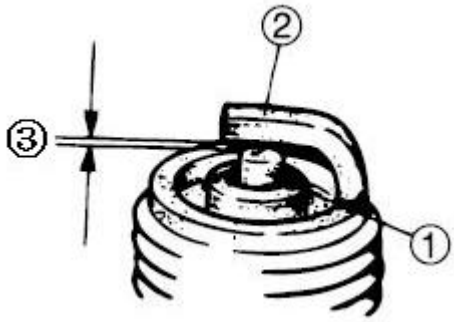

Standard spark plugA7TC
③ Gap:0.6-0.8mm

Inspect:
- Insulator ①
  Abnormal color: Replace.
  Normal color is a medium-To-lighttan color.
- Electrode ②
  Wear/damage: Replace/Clean.
- Spark plug
  (with spark plug cleaner or wire brush)

Measure:
- Spark plug gap ③

Out of specification: Adjust gap.

Spark Plug Removal and Replacement

WARNING

Never attempt to remove a spark plug while the engine is warm. The exhaust system or engine could burn you causing severe injury.

Remove the spark plug by rotating counterclockwise.
Reverse the procedure for spark plug installation.
Torque to 17ft.lbs (23N.m).

OIL AND FILTER CHANGE

Recommended Engine Oil
Refer to the chart for selection of the oils suited to the atmospheric temperature.

API Standard: API SG grade.

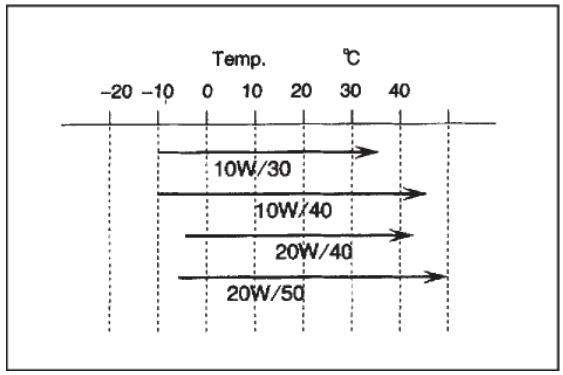

16. MAINTENANCE

CAUTION

- Be sure no foreign material enters the crankcase.
- Do not put in any chemical additives or use oils with a grade of CD or higher.
- Be sure not to use oils labeled

"ENERGY CONSERVING II" or higher. Engine oil also lubricates the clutch and - additives could cause clutch slippage.

The recommended oil change interval is 30 hours, or every 3 months, whichever comes first. Suggested break in oil change is at 20 hours, or one month, whichever comes first. Severe use operation requires more frequent service. Severe use includes continuous duty in dusty or wet conditions, and cold weather riding.

NOTE: Severe use cold weather riding is all riding below 10°F(-12℃), and riding between 10°F(-12℃) and 30°F(0℃) when most trips are slow speed and less than 5 mph (8km/h).Be sure to change the oil filter whenever changing oil.

CAUTION

Oil may be hot. Do not allow hot oil to come into contact with skin as severe burns may result.

Engine Oil Level Inspection

1. Place vehicle on a level surface;
2. Start the engine and let it warm up for a few minutes;
3. Turn off the engine.

NOTE:

Wait a few minutes until the oil settles before inspecting the oil level.

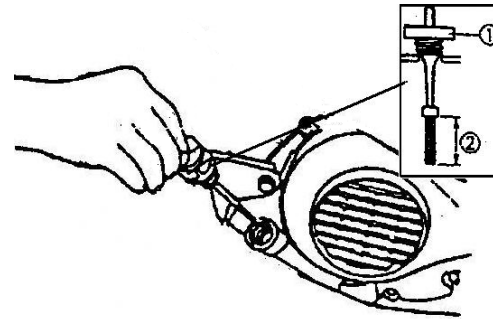

4. Inspect: (Do not thread dipstick in)

- Engine oil level

Oil level should be between maximum and minimum marks ②.

Oil level is below the minimum mark, Add oil up to the proper lever.

16. MAINTENANCE

Engine Oil Replacement

1. Place vehicle on a level surface;
2. Run engine two or three minutes until warm, Stop engine;
3. Clean area around drain plug;
4. Place a drain pan beneath engine crankcase.
5. Remove:

- Oil filler plug
- Drain plug
- Compression spring
- Oil strainer
- O-ring

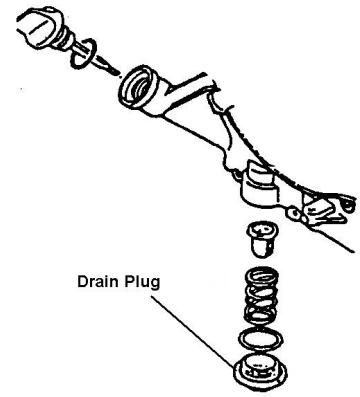

6. Allow oil to drain completely;
7. Install:

- O-ring, New
- Compression spring
- Oil strainer, New, if necessary
- Drain plug, and torque to 32N.m;

8. Use the funnel, Fill Crankcase with 1.4L engine oil, refer to **Recommended Engine Oil**;
9. Check the oil level. refer to **Engine Oil Level Inspection**;
10. Reinstall the Oil filler plug.

Transmission Lubrication

CAUTION

Be sure no foreign material enters the transmission case.

Transmission Oil Changing Procedure

1. Remove the four screws on the footwall and gently pull outward for access.
2. Remove fill plug.
3. Remove transmission drain plug located on the bottom left hand side and drain the oil. Catch and discard used oil properly.
4. Clean and reinstall the drain plug torque to 14 ft.lbs. (20Nm）
5. Add the correct amount of SAE 80W/90GL5 Lubricant until oil reaches the bottom of the filler hole
6. Check for leaks.

16. MAINTENANCE

WHEELS AND TIRES

WARNING

Operating your UTV with worn tires, improperly inflated tires, non-standard tires or improperly installed tire will affect vehicle handling which could cause an accident resulting in serious injury or death.
Follow the safeguards listed below to prevent this type of situation.

Important Safeguards

Maintain proper tire pressure according to charts below. Improper tire inflation may affect UTV maneuverability.
Do not use improper tires. The use of non-standard size or type tires may affect UTV handling.
Make certain the wheels are installed properly. If wheels are improperly installed it could affect vehicle handling and tire wear.

Tire Pressure	
front	rear
48kPa/7SI	48kPa/7PSI

Wheel Removal Procedure

1. Stop the engine, place the transmission in gear and lock the parking brake.
2. Loosen the wheel nuts slightly.
3. Elevate the side of the vehicle by placing a suitable stand under the footrest frame.
4. Remove the wheel nuts and remove the wheel.

Wheels Installation

1. With the transmission in gear and the parking brake locked, place th wheel in the correct position on the wheel hub. Be sure the valve stem is toward the outside and totation arrows on the tire point toward forward rotation.
2. Attach the wheel nuts and fingertighten them.
3. Lower the vehicle to the ground.
4. Securely tighten the wheel nuts according to the chart found in "**16. MAINTENANCE/ Wheel Nut Torque**".

16. MAINTENANCE

Tire Inspection
When replacing a tire always use original equipment size and type.

Tire Tread Depth
Always replace tires when tread depth is worn to 1/8" (3mm) or less. Please refer to your Owner's Manual for tire specifications.

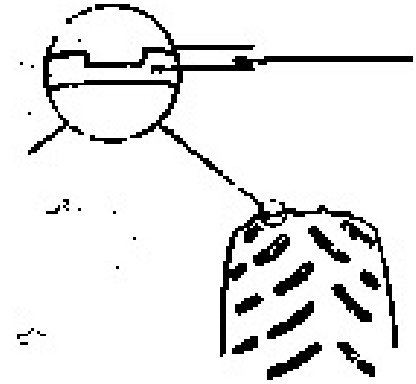

LIGHTS

WARNING

Keep your headlights and taillights clean. Poor light while riding can result in an accident causing severe injury or death.

CAUTION

Do not service while headlight is hot. Serious burns may result.
Do not touch a halogen lamp with bare fingers. Oil from your skin leaves a residue, causing a hot spot which will shorten the life of the lamp.

High Beam Headlight Adjustment
The headlight beam can be adjusted up and down.

1. Place the vehicle on a level surface with the headlight approximately 10''(3m) from a wall.
2. Measure the distance from the floor to the center of the headlight and make a mark on the wall at the same height.
3. Start the engine and turn the headlight switch to high beam.
4. Observe headlight aim. The most intense part of the headlight beam should be aimed 2.8'' (71mm) below the mark placed on the wall in step 2.
   NOTE : Driving location must be on the seat.
5. To turn the two adjusting screws clockwise is to lower the beam area and to turn the two adjusting screws counterclockwise is to heighten the beam area.

16. MAINTENANCE

CLEANING YOUR UTV

Keeping your UTV clean will extend the life of various components.

Washing

Never use a high pressure type car wash system, it can damage to the wheel bearings, transmission seals, body panels, brakes and warning labels, and water might enter the engine or exhaust system.

The best and safest way to clean your UTV is with a garden hose and a pail of mild soap water. Use a professional type washing mitten, cleaning the upper body first and lower parts last. Rinse with water frequently and dry with a cloth to prevent water spots.

NOTE: If warning labels are damaged, contact your dealer for replacement.

Waxing

Your UTV can be waxed with any non-abrasive automotive paste wax. Avoid the use of harsh cleaners since they can scratch the body finish.

CAUTION

Certain products, including insect repellants and chemicals, will damage plastic surfaces. Care must be taken when using these products.

16. MAINTENANCE

STORAGE TIPS

CAUTION

Do not start the engine during the storage period. This will disturb the protective film created by fogging.

Cleaning——Clean the UTV thoroughly.
Oil Add and Filter Change——Stop the engine and change oil and filter.
Air Filter/Air Box——Inspect and clean or replace the pre-cleaner and air filter. Clean the air box and the sediment tube.
Inspect All Fluid Levels——Inspect the following fluid levels and change if necessary: transmission; brake fluid (change every two years or as required if fluid looks dark or contaminated).
Fog the Engine——Spray a light oil into the cylinder through the spark plug hole.
Check and Lubricate Cables/Grease——Inspect all cables and lubricate.
Battery Maintenance——Remove the battery and add electrolyte as required to the proper level. Do not use tap water which may contain minerals that reduce battery life. Apply Dielectric Grease to the terminal bolts and terminals. Charge the battery.
Storage Area/Covers——Set tire pressure and safely support the UTV with the tires 1-2"(25-50mm) off the ground. Be sure the storage area is well ventilated. Cover the machine with a UTV cover.
NOTE: Do not use plastic or coated materials. They do not allow enough ventilation to prevent condensation, and may promote corrosion and oxidation.

TRANSPORTING

Whenever the UTV is to be transported the following measures should be taken.

1. Turn off the engine and remove the key.
2. Be certain the fuel cap, oil cap, and seat are installed correctly.
3. Always tie the frame of the UTV to the transporting with securely using suitable straps or rope.
4. Always place the transmission in gear and lock the parking brake.

17. TROUBLESHOOTING

LOW BATTERY

Possible Cause	Solutions
Start a faulty engine for long time.	See"8.STARTING THE ENGINE" And check the fuel/ air/ ignition/ compression system.
Let the main switch (key) on while parking the UTV.	When stopping the engine, turn off the main switch (key) off at once.

WARNING

This UTV is equipped with an electric start system. If the battery is under charging, the UTV will not run.

NOTE:
The following troubleshooting does not cover all the possible causes of trouble. It should be helpful, however, as a guide to troubleshooting. Refer to the relative procedure in this manual for inspection, adjustment and replacement of parts. Adjustment and replacement must be done by your dealer.

17. TROUBLESHOOTING

STARTING FAILURE/ HARD STARTING

FUEL SYSTEM

Fuel tank

- Empty
- Clogged fuel tank breather hole
- Fuel pump is clogged
- Deteriorated fuel or fuel containing water or foreign material

Auto choke

- Starter plunger malfunction
- Wax malfunction

Electric fuel injection

- ECU failure or wiring faulty
- Nozzle clogging or failure
- Throttle position sensor failure
- EFI relay does not work

Air cleaner

- Clogged air cleaner element
- Improper air cleaner setting

COMPRESSION SYSTEM

Cylinder and cylinder head

- Loose spark plug
- Loose cylinder head
- Broken cylinder head gasket
- Broken cylinder gasket
- Worn, damaged or seized cylinder

Piston and Piston ring

- Worn piston
- Worn fatigued or broken piston ring
- Seized piston ring
- Seized or damaged piston

Valve system

- Improperly adjusted valve clearance
- Improperly sealed valve
- Improperly contacted valve and vale seat
- Improper valve timing
- Broken valve spring
- Seized valve

17. TROUBLESHOOTING

IGNTION SYSTEM

Battery
- Improperly charged battery
- Faulty battery

Fuse
- Burnt out, improper connection

Spark plug
- Improper plug gap
- Worn electrodes
- Wire between terminals broken
- Improper heat range
- Faulty spark plug cap

Ignition coil
- Broken or shorted primary/ secondary coil
- Faulty high tension cord
- Broken ignition coil body

Ignition system
- Faulty ignition unit
- Faulty pick up coil
- Broken magneto woodruff key

Switch
- Faulty main switch
- Faulty brake switch

Wiring
- Loose battery terminal
- Loose coupler connection
- Improperly grounded
- Broken wire-harness

POOR IDLE SPEED PERFORMANCE

EFI
- Loose or clogged pilot jet
- Trigger coil gap inappropriate
- Ignition loop cable failure
- Improperly adjusted idle speed (Pilot screw), (Throttle stop screw)
- Improperly adjusted throttle cable
- Intake pressure temperature sensor failure

Air cleaner
- Clogged air cleaner element

Ignition system
- Faulty spark plug
- Faulty high tension cord
- Faulty ignition unit
- Faulty pick up coil
- Faulty ignition coil

17. TROUBLESHOOTING

Auto choke

•Faulty starter plunger

•Improper wax operation

Valve system

•Improperly adjusted

•valve clearance

POOR MIDDLE AND HIGH SPEED PERFORMANCE

EFI

•Improperly adjusted fuel level

•Clogged main nozzle

•Clogged or loose pilot jet

Air cleaner

•Clogged air cleaner element

POOR SPEED PERFORMANCE

Ignition system

•Dirty spark plug

•Improper heat range

•Faulty ignition unit

•Faulty pick up coil

Fuel system

•Clogged fuel tank breather hole

•Clogged air cleaner element

•Clogged jet

•Improperly adjusted fuel level

Compression system

•Worn cylinder

•Worn or seized piston ring

•Cylinder head gasket broken

•Cylinder gasket broken

•Carbon deposit buildup

•Improper adjusted valve clearance

•Improper contacted valve and valve seat

•Faulty valve timing

Clutch

•Refer to "CLUTCH SLIPPING /DRAGGING" section

Engine oil

•Improper oil level(low or over Oil level)

17. TROUBLESHOOTING

Ignition system

•Faulty spark plug

•Faulty high tension cord

•Faulty ignition unit

•Faulty pick up coil

•Faulty ignition coil

Valve system

•Improperly adjusted valve clearance

OVER HEATING

Ignition system

•Improperly spark plug gap

•Improper spark plug heat rang

•Faulty ignition unit

Fuel system

•Improper EFI setting

•Improper fuel level adjustment

•Clogged air cleaner element

Compression system

•Heavy carbon deposit build-up

•Improperly adjusted valve timing

•Improperly adjusted valve clearance

Engine oil

•Incorrect engine oil level

•Improper engine oil quality (High viscosity)

•Low engine oil quality

Brakes

•Dragging brake

OVER-COOLING

Cooling system

•Faulty thermostat

•Faulty thermo-switch

17. TROUBLESHOOTING

FAULTY CLUTCH

WHEN ENGINE RUN, UTV DOES NOT RUN

V-belt
•Worn/bent/slipping

Cam, slider
•Worn/damaged

Compression spring
•Damaged

Gears
•Damaged

POOR SPEED PERFORMANCE

V-belt
•Worn
•Oil V-belt

Roller weight
• Worn/improper operation primary/secondary/sheave
• Worn

CLUTCH SLIPPING

Clutch weight spring
•Worn/loose

Clutch shoe
•Worn/ damaged

Primary sliding sheave
•Seized

CVT SYSTEM

Incorrect Primary Clutch Position
•Incorrect engine mount
(see 13. CVT system)

POOR STARTING PERFORMANCE

V-belt
•Slipping/oily V-belt

Primary sliding sheave
•Improper operation
•Damaged

compressing spring
•Worn/loose

Secondary sliding sheave
•Improper operation
•Worn guide pin grove
•Worn guide pin

Clutch shoe
•Worn/ bent

FAULTY BRAKE POOR BRAKING EFFECT

•Worn front hub bearing
•Worn brake pad
•Worn brake disc
•Air in brake fluid
•Leaking brake fluid
•Faulty master cylinder kit
•Faulty caliper seal kit
•Loose union bolt
•Broken brake hose
•Oil or greasy brake pad
•Oil or greasy brake disc

18. TOOL

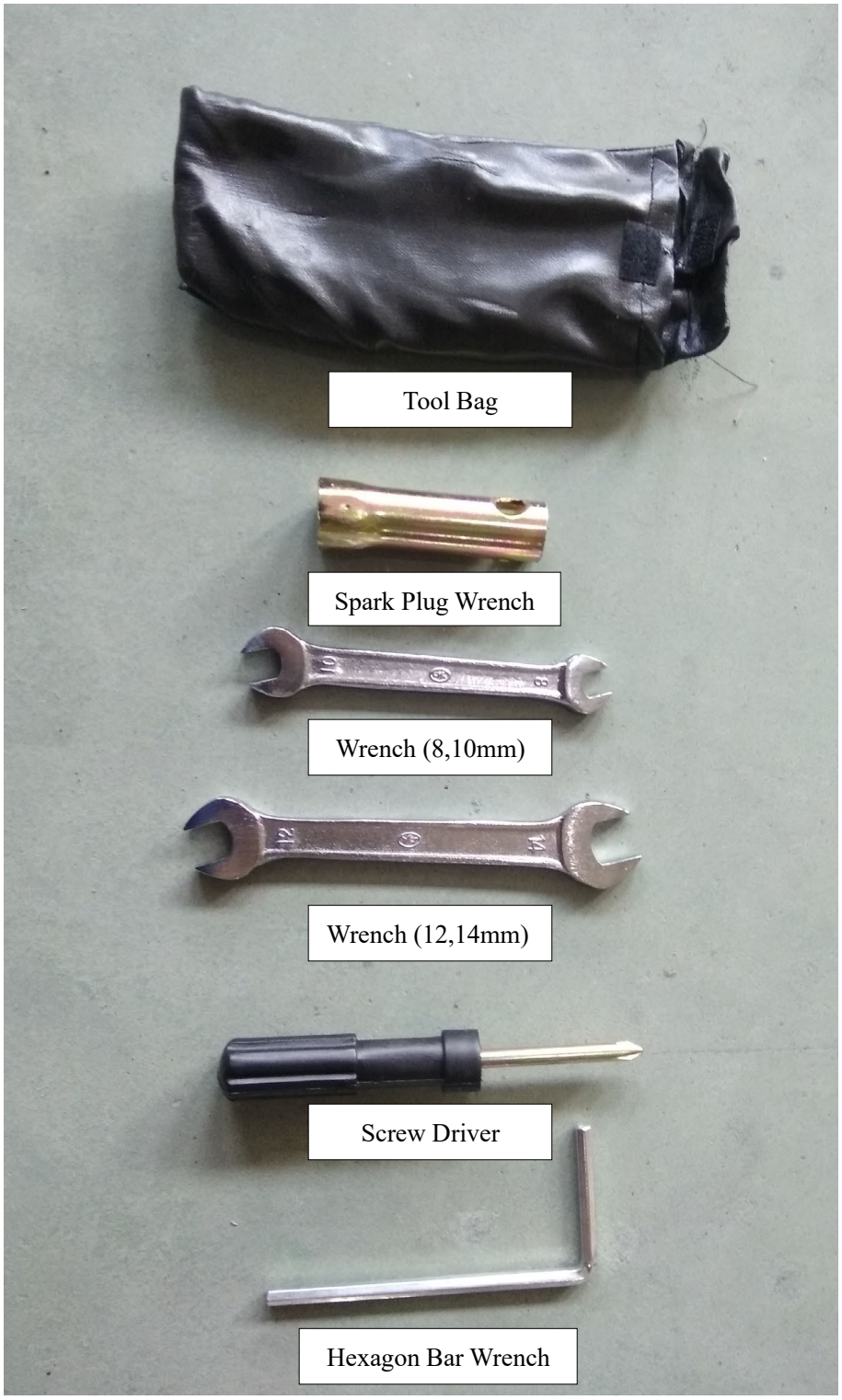
Tool Bag
Spark Plug Wrench
Wrench (8,10mm)
Wrench (12,14mm)
Screw Driver
Hexagon Bar Wrench

19. SPECIFICATIONS

Dimensions & Capacities		
L X W X H	2362X1397X1870 mm	93x 55x73.6 in
Seat height	815mm	32 in
Wheelbase	1620mm	63.7 in
Ground Clearance	260mm	10.2 in
Fuel capacity	18 L	4.76 US gal
Engine Oil Capacity	1.1 L	0.3 US gal
Dry Weight	413 kg	911 lbs.
Cargo Bed Maximum load limit	100 kg	220 lbs.
Load Capacity (Combined Rider& Payload)	250kg	551.6 lbs.
Tow Capacity	200 kg	450 lbs.
Drive System		
Drive System	CVT	
Front Tire	24X8-12	
Rear Tire	24X8-12	
Tire Pressure (front)	48 kPa	7 PSI
Tire Pressure (rear)	48 kPa	7 PSI
Brake System		
Brake	Front Brake	Dual Hydraulic Disc / Front and rear unified
	Rear Brake	
	Operation	Foot
Parking Brake	Mechanical Disc	
Suspension		
Front	MacPherson Strut	
Rear	Swing Arm	
shock absorber	Coil spring/oil damper	

19. SPECIFICATIONS

Engine	
Engine Type	XY163QML-B 4-Stroke, Single Cylinder, SOHC
Bore x Stroke	62.5mmx57.8mm
Displacement	177.3cc
Starter System	Electric Starter
Engine Cooling	Air/Oil-Cooled
Lubrication System	Wet Sump
ECU	MT05
Ignitions	EFI
Spark Plug Type	A7TC

Electrical Equipment			
Battery		12V 9AH	
Head light		LED	
Brake/ Taillight		LED	
High Beam Indicator Light		LED	
Reverse Indicator Light		LED	
Turn Light (Europe Only)		LED	
Turn Indicator Light (Europe Only)		LED	
Front Position Light		LED	
Register Plate Light (Europe Only)		LED	
Specified fuses	Main Fuse	20.0 A	On the Start Relay
	Backup Fuse	20.0 A	
	Ignition System Fuse	7.5 A	In the Fuse Box
	Accessory Socket Fuse	10.0 A	
	Signaling/ Lighting System Fuse	20.0 A	
	Backup Fuse (1)	7.5 A	
	Backup Fuse (2)	10.0 A	
	Backup Fuse (3)	20.0 A	

20. WIRNING DIAGRAM
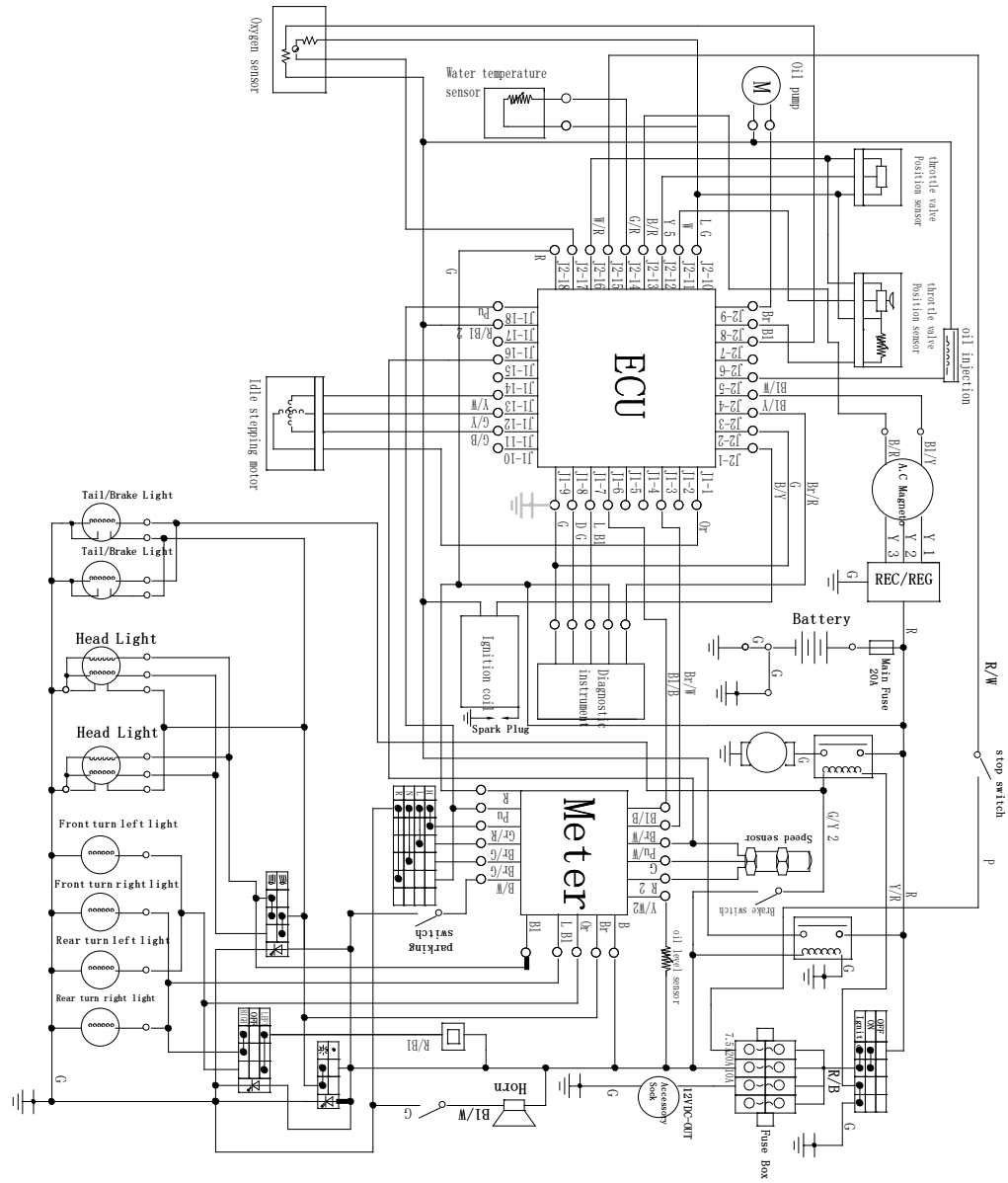
Note	Colour
R	Red
Y	Yellow
Br	Brown
L G	Light Green
W	White
G/R	Green/Red
W/R	White/Red
P	Pink
G	Green
G/B	Green/Black
G/Y	Green/Yellow
Y/W	Yellow/White
Or	Orange
Bl/W	Blue/White
R/Bl	Red/Blue
B/Y	Black/Yellow
Bl	Blue
L Bl	Light Blue
D G	Dark Green
Br/R	Brown/Red
B/R	Black/Red
Bl/Y	Blue/Yellow
Bl/B	Blue/Black
Pu/W	Purple/White
Pu	Purple
Y/R	Yellow/Red
R/W	Red/White
Gr/R	Gray/Red
Br/G	Brown/Green
G/W	Green/White
B/G	Black/Green
Gr/G	Gray/Green
B/W	BLACK/White
Gr	Gray
Gr/W	Gray/White
Br/R	Brown/Red