OWNER'S/OPERATOR'S

MANUAL

WARNING:

Read this Manual, and any Supplements Carefully Before Operating Vehicle.

•Assembly
•Operation
•Maintenance

THIS VEHICLE IS NOT DESIGNED FOR USE ON RENTAL TRACKS OR RACING

XY80ED

- **BEFORE OPERATING THIS VEHICLE, THE OWNER AND EACH OPERATOR MUST HAVE READ AND HAVE AN UNDERSTANDING OF ALL THE INSTRUCTIONS FOR PROPER ASSEMBLY AND SAFE OPERATION, AS WELL AS THE INSTRUCTIONS CONCERNING THE ENGINE AND ALL OTHER PORTIONS OF THE VEHICLE.**

NOTE: A storage area/toolbox has been provided on the UTV for storage of this manual.
Please keep this manual in storage so that it can be found easily and referenced when needed.

CONTENTS

1. INTRODUCTION 1.1
2. UNDERSTANDING WARNING 2.1
3. SAFETY WARNING 3.1
4. DAILY PRE-RIDE INSPECTION 4.1
5. OPERATION WARNING 5.1
6. V.I.N. NUMBER 6.1
7. CONTROL AND FUNCTIONS 7.1
8. RIDING GEAR 8.1
9. CARRYING LOADS 9.1
10. BATTERY 10.1
11. MAINTENANCE 11.1
12. TROUBLE SHOOTING 12.1
13. SPECIFICATION 13.1
14. WIRING DIAGRAM 14.1

1. INTRODUCTION

Introduction

Congratulations on the purchase of your Utility Task Vehicle (UTV). We take pride in offering you this product engineered and manufactured to the highest performance and quality standards. We are sure that you will enjoy superior levels of performance, reliability, riding comfort, and safety.

This manual is provided to help the owner and operators of this UTV become familiar with the operating characteristic, and the many features offered on the UTV. The manual also covers information on the care and maintenance of your UTV.

Please read this manual carefully. The information contained in this Owner's Manual, the Warning Labels supplied with this product will help you to understand the safe use and maintenance of your UTV. Make sure that you understand and follow all Warnings and Instructions in this material.

If you did not receive any of the material listed above, please call your dealer and request to have them sent to you.

Product and specifications are subject to change without notice.

1. INTRODUCTIOPN

Important Safety Notice

●Check the laws and regulations in force before choosing where to operate this vehicle. It is illegal to operate this vehicle on public lands where vehicles its size are prohibited.

● Never make any modifications to the engine, drive system, mechanical or electrical systems of your UTV. Never install aftermarket parts or accessories intended to increase the speed or power of your UTV.

●Failure to follow these warnings increases the possibility of accidents leading to **DEATH** or **SERIOUS INJURY!**

● Additionally, failure to follow these requirements will void the Warranty on your UTV.

NOTE

The addition and use of certain accessories including, (but not limited to) mowers, blades, sprayers, winches and windshields will change the handling characteristics and the performance of your UTV.

Practice Responsible UTV Riding

Make sure that you understand and follow all local, state/province, and federal/national riding laws and requirements.

Remember……Respect your vehicle, respect the environment and respect the property of others. You are responsible for your safety and the safety of others around you when you ride!

1. INTRODUCTIOPN

A UTV CAN BE HAZARDOUS TO OPERATE.

A UTV handles differently from other vehicles including motorcycles, ATVs and cars. A collision rollover can occur quickly, even during routine maneuvers such as turning and driving on hills or over obstacles, if you fail to take proper precautions.

SERIOUS INJURY OR DEATH
can result if you do not follow these instructions.

- Read this manual and all labels carefully and follow the operating procedures described.
- This vehicle is designed to carry the driver and one passenger. Never carry passengers in the cargo bed.
- Always be sure the driver and passenger are wearing seat belts.
- Never allow anyone who is not an adult to operate this UTV.
- Never permit a guest to operate this UTV unless the guest has read this manual and all product labels.
- The driver and passenger must wear approved off-road motorcycle -type helmets that fits properly. The driver and passenger should also wear eye protections (glasses or face shields), gloves, boots, long-sleeved shirts or jackets, and long pants.
- As with any off-road-capable vehicle, there is a risk of tip over or rollover under certain conditions. Uneven terrain or slopes which pitch the vehicle sideways, turning too fast or sharp, or a combination of conditions increase the risk of tip over.
  If you are in a situation where the vehicle is tipping over, do not put your arm or/ and leg outside the vehicle, do not try to stop tipping with your arm or leg. You could be severely injured. You could suffer a crushed hand, arm, leg, or foot, if part of your body is caught underneath the vehicle.
  You must keep your arms and legs inside the vehicle until it has stopped moving.
- Never consume alcohol or drugs before or while operating this UTV.
- Never operate at excessive speeds. Always travel at a speed which is proper for the terrain, visibility and operating conditions, and your experience.
- Never attempt wheelies, jumps or other stunts.

1. INTRODUCTIOPN

- Always inspect your UTV each time you use it to make sure it is in safe operating condition. Always follow the inspection and maintenance procedures and schedules described in this manual.
- Always keep both hands, arms, feet, and legs inside the vehicle at all times during operation. Keep your feet on the floorboard. Never hold onto the enclosure except when using the handgrip inside the enclosure. Otherwise, your hand could be injured if it is caught between the enclosure and an obstacle outside the vehicle.
- Always keep both hands on the steering wheel when driving.
- Never wrap your thumbs and fingers around the steering wheel. This is particularly important when driving in rough terrain. The front wheels will move right and left as they respond to the terrain, and this movement will be felt in the steering wheel. A sudden jolt could wrench the steering wheel around, and your thumbs or fingers could be injured if they are in the way of the steering wheel spokes.
- Always go slowly and be extra careful when operating on unfamiliar terrain. Always be alert to changing terrain conditions when operating the UTV.
- Never operate on excessively rough, slippery or loose terrain.
- Always follow proper procedures for turning as described in this manual. Practice turning at low speeds before attempting to turn at faster speeds. Do not turn at excessive speed.
- Always have the UTV checked by an authorized dealer if it has been involved in an accident.
- Never operate UTV on hills too steep for the UTV or for your abilities. Practice on smaller hills before attempting larger hills.
- Always follow proper procedures for climbing hills as described in this manual. Check the terrain carefully before you start up any hill. Never climb hills with excessively slippery or loose surfaces. Never open throttle suddenly or make sudden gear changes. Never go over the top of any hill at high speed.
- Always follow proper procedures for going down hills and for braking on hills as described in this manual. Check the terrain carefully before you start down any hill. Never go down a hill at high speed. Avoid going down a hill at an angle which would cause the vehicle to lean sharply to one side. Go straight down the hill where possible.
- Always follow proper procedures for crossing the side of a hill as described in this manual. Avoid hills with excessively slippery or

loose surfaces. Never attempt to turn the UTV around on any hill. Avoid crossing the side of a steep hill if possible.

- Always use proper procedures if you stall or roll backwards when climbing a hill. To avoid stalling, maintain a steady speed when climbing a hill. If you stall or roll backwards, follow the special procedure for braking described in this manual.
- Always check for obstacles before operating in a new area. Never attempt to operate over large obstacles, such as large rocks or fallen trees. Always follow proper procedures when operating over obstacles as described in this manual.
- Always be careful of skidding of sliding. On slippery surfaces, such as ice, go slowly and be very cautious in order to reduce the chance of skidding or sliding out of control.
- Avoid operating the UTV through deep or fast flowing water. Avoid water which exceeds the recommended maximum depth. Go slowly, carefully avoiding sudden movements, maintain a slow and steady forward motion, do not make sudden turns or stops, and do not make sudden throttle changes.
- Wet brakes may have reduced stopping ability. Test your brakes after leaving water. If necessary apply them lightly several times to let friction dry out the pads.
- Always be sure there are no obstacles or people behind you when you operate in reverse. When it is safe to proceed in reverse, go slowly. Avoid turning at sharp angles in reverse.
- Always use the size and type tires specified in this manual. Always maintain proper tire pressure as described in this manual.
- Never modify A UTV through improper installation or use of accessories
- Never exceed the stated load capacity. Cargo should be as far forward in the bed as possible, and distributed evenly from side to side. Be sure cargo is secured so that it cannot move around during operation. Reduce speed and follow instructions in this manual for carrying cargo or pulling a trailer. Allow greater distance for braking.

2. UNDERSTANDING WARNINGS

ATTENTION:

This is an ADULT VEHICLE ONLY! Not a toy!
READ AND UNDERSTAND WARNINGS AND OWNER'S MANUAL BERORE OPERATION.

KNOW YOUR VEHICLE BEFORE YOU BEGING RIDING!

Read this manual thoroughly referring to the various areas which are being discussed on your machine. Operating this vehicle carries with it responsibilities for your personal safety, the safety of others, and the protection of our environment.

NOTE: Illustrations used in this manual are for general representation only. Your model may differ.

---

2. UNDERSTANDING WARNINGS

SAFETY ALERT

WARNINGS identify special instructions or procedures which, if not correctly followed, could result in personal injury, or loss of life. Read all WARNINGS in this manual carefully. Follow their instructions to remain safe.

The following precautionary signal words are used throughout this manual to convey the following messages:

This is the safety alert symbol. When you see this symbol on your machine or in this manual, be alert to the potential for personal injury. Your safety is involved!

WARNING

Indicates a potential hazard which could result in severe injury or death.

CAUTION

Indicates a potential hazard which may result in minor personal injury or damage to the UTV.

CAUTION

Indicates a situation that can result in damage to the machine.

NOTE **The word "NOTE" in this manual will alert you to key information or instructions.**

3. SAFETY WARNING

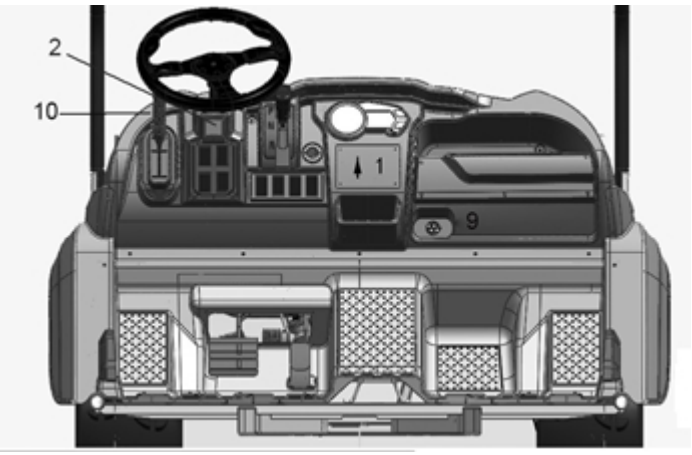

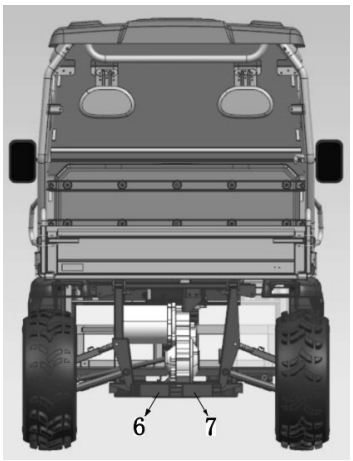

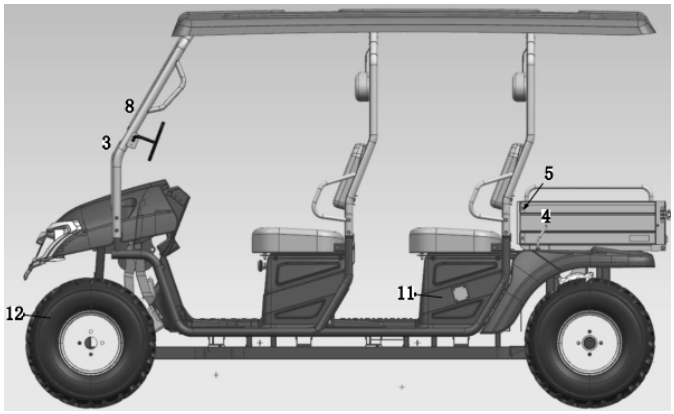

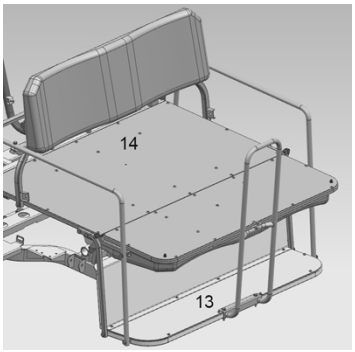

NOTE:
Warning decals have been placed on the vehicle for your protection. Read and follow the instructions on each decal carefully. In the event any decal becomes illegible or comes off, contact your dealer for a replacement.

NOTE:

3. SAFETY WARNING

1

WARNING

Improper use can result in Server INJURY or DEATH

BE PREPARED
- Fasten seat belts.
- Wear an approved helmet and protective gear.
- Each rider must be able to sit with back against seat.

Feet flat on floor [and foot rests], and hands on steering wheel or handhold(s), [where equipped], Stay completely inside the vehicle.

Drive Responsibly

Avoid loss of control and rollovers:
- Avoid abrupt maneuvers, sideways sliding, skidding, or fishtailing, and never do donuts.
- Slow down before entering a turn.
- Plan for hills, rough terrain, ruts, and other changes in traction and terrain. Avoid paved surfaces.
- Avoid side hilling (ride across slopes).

Be Sure Riders Pay Attention and Plan Ahead

If you think or feel the vehicle may tip or roll, reduce your risk to injury:
- Keep a firm grip on the steering wheel or handholds and brace yourself.
- Do not put any part or your body outside of the vehicle for any reason.

Require Proper Use of Your Vehicle

Do you part to prevent injuries:
- Do not allow careless or reckless driving.
- Make sure operators are 16 or older with a valid driver's license.
- Do not let people drive or ride after using alcohol or drugs.
- Do not allow operation on public roads (unless designated for off-highway vehicle access)—collisions with cars and trucks can occur.
- Do nor exceed seating capacity; 1 passenger.

ALWAYS USE AN APPROVED HELMET AND PROTECTIVE GEAR

NEVER USE PUBLIC ROADS OR PAVEMENT

NEVER USE WITH DRUGS OR ALCOHOL

[Locate and] Read [Owner's Manual]
Follow All Instruction and Warnings
[Reserved for Reference to Other Sources of Safety Information]

2

WARNING

· IMPORPER TIRE PRESSURE OR OVERLOADING CAN CAUSE LOSS OF CONTROL.
· LOSS OF CONTROL CAN RESULT IN SEVERE INJURY OR DEATH.
· OPPERATING TIRE PRESSURE:
SET WITH TIRES COLD. ALWAYS MAINTAIN PROPER TIRE PRESSURE AS INDICATED ON THE SIDE WALL OF YOUR VEHICLE TIRES.
NEVER SET TIRE PRESSURE BELOW THE RECOMMENDED.
TIRE MAY DISLODGE FROM RIM
GROSS VEHICLE WEIGHT RATING:893kg(1969lbs)
MAXIMUM INCLUDING WEIGHT OF OPERATOR, PASSENGER, ACCESORIES, CARGO AND (IF APPLICABLE) TRAILER TONGUE WEIGHT.

3

WARNING

The enclosure cannot protect occupants in all foreseeable accidents,including rollover.

4

WARNING

- Keep hands,body,other persons away when closing bed.
- Do not operate the vehicle with bed up.

3. SAFETY WARNING

5

⚠ WARNING

Severe INJURY or DEATH can result if you ignore the following :

- **Maximum Load in Cargo Bed:200kg(440lbs).**
- **Never carry passengers in cargo bed.**
- **Cargo can affect handling and stability.**

Read Owner's Manual before loading or towing.

- **When loading with cargo or towing a trailer:Reduce speed and allow more room to stop.Avoid hills and rough terrain.**
- **Be sure cargo is secured a loose load could change handling unexpectedly.**
- **Keep weight in the cargo bed centered ,and as low and far forward as possible.Top heavy loads increase the risk of overturn.**

6

⚠ WARNING

Pulling excessive loads can cause loss of stability or control of the vehicle.

Do not exceed the load capacity for the hitch.

Trailer Load Capacity of this vehicle is 441 lbs /200kg and 25lbs/ 11kg tongue weight.

7

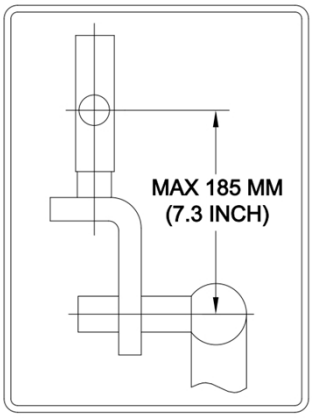

8

⚠ WARNING

You could be severely injured if you try to stop a vehicle tip over using your arm or leg. If vehicle starts to tip over, keep arms and legs inside vehicle.

Slopes, uneven terrain, and turning too fast or sharp increase the risk of tip over.

⚠ WARNING

You could be severely injured if you try to stop a vehicle tip over using your arm or leg. If vehicle starts to tip over, keep arms and legs inside vehicle.

Slopes, uneven terrain, and turning too fast or sharp increase the risk of tip over.

3. SAFETY WARNING

9

CAUTION

- This socket only for accessory power
- Maximum wattage100w
- Not for cigarette lighter use

10

WARNING

· Turn speed not to exceed 25MPH/40KPH

· Do not drive in the water deeper than 13-inch.

11

WARNING

- Charge the battery every month
- Charge the battery after use
- Stop charging batteries when the charging indication light becomes green
- Charge should not exceed 8 hours

12

WARNING

Don't insert or pull out the plug when the vehicle is still powered on, which will cause motor out of control. It is very dangerous!

13

CAUTION

- Do not stand on it when driving
- Do not jump or stand on
- Max loading not to exceed 220 lbs

14

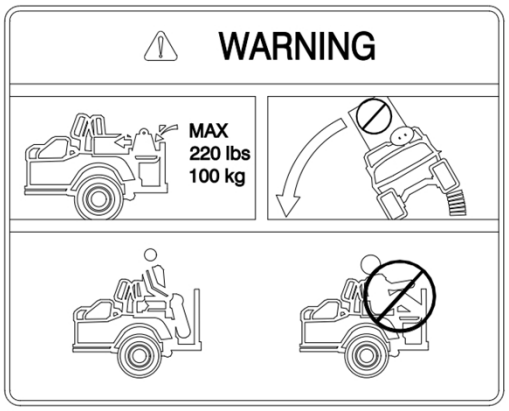

4. DAILY PRE-RIDE INSPECTION

WARNING

You must inspect your UTV each time before riding to ensure it is in proper working order. If proper inspection is not done, severe injury or death could result.

Use the following checklist to verify your machine is in proper working order each time you ride.

ITEM/ INSPECTION PROCEDURE

1, Tire— check condition and pressures.
2, Battery—Check whether the connection is reliable, whether the terminal has protection
3, All brakes— check fluid level, check operation, adjustment (includes parking brake).

- Brake pedal

Check for correct brake pedal free play. If the brake pedal free play is incorrect, have an authorized dealer adjust it. Check the operation of the brake pedal. It should move smoothly and there should be a firm feeling when the brakes are applied. If not, have the vehicle inspected by your dealer.

- Brake fluid leakage

Check to see if any brake fluid is leaking out of the pipe joints or the brake fluid reservoir. Apply the brakes firmly for one minute. If there is any leakage, have the vehicle inspected by an authorized dealer.
Brake fluid level

- Check the brake fluid level.

Add fluid if necessary.

- Brake operation

Test the brakes at slow speed after starting out to make sure they are working properly. If the brakes do not provide proper braking performance, inspect the brake system.

4, Throttle/ Accelerator pedal— check for free operation, closing and freeplay.
Check to see that the accelerator pedal operates correctly. It must operate smoothly and fully spring back to the idle position when released.

4. DAILY PRE-RIDE INSPECTION

Have an authorized dealer repair as necessary for proper operation.

5, Headlight / Taillight / Brake light— check operation of all indicator lights and switches.

6, Air Switch— check for proper function.

7, Wheels— check for tightness of wheel nuts and axle nuts; check those axle nuts are secured by cotter pins.
Check balance/ damage/ runout. Have an authorized dealer repair/ replace if necessary.
Check bearing assemblies for looseness/damage. Have an authorized dealer replace if damaged.

8, Steering— check for free operation noting any unusual looseness in any area.
Park on level ground. Turn the steering wheel right and left. Check for excessive free play, abnormal noises, or a rough feeling. Have an authorized dealer repair as necessary for proper operation.

9 Loose parts— visually inspect vehicle for any damaged components or loose nuts/bolts or fasteners.
Always check the tightness of chassis fittings and fasteners before a ride. Take the vehicle to your dealer for correct tightening torque.

10, Operator's and passenger's helmets, goggles and clothing.

11, Seat belts— Check for proper operation and belt wear.
Make sure that both seat belts are not frayed or damaged. The seat belt must move smoothly when pulled out and retract on its own when released. The latch plate should click securely into the buckle and release when the release button is pushed firmly. Clean off any dirt or mud which could affect operation. Have an authorized dealer repair as necessary for proper operation.

5. OPERATION WARNINGS

WARNING

POTENTIAL HAZARD

Plug in electrical parts on power on state

WHAT CAN HAPPEN

Will cause signal interference and the vehicle maybe out of control, could result in severe injury or death.

HOW TO AVOID THE HAZARD

Don't plug in electrical parts on power on state.

WARNING

POTENTIAL HAZARD

Flush the vehicle with plenty of water or use a wet cloth to clean electrical parts and batteries

WHAT CAN HAPPEN

It may cause a short circuit, burn the circuit and electrical components, causing fire and electricity leakage, could result in severe injury or death.

HOW TO AVOID THE HAZARD

Don't flush the vehicle with plenty of water or use a wet cloth to clean electrical parts and batteries. Protection of the vehicle is not subject to a large number of water droplets spray.

WARNING

POTENTIAL HAZARD

Malfunction of the electronic accelerator pedal.

WHAT CAN HAPPEN

The accelerator pedal could be hard to operate, making it difficult to speed up or slow down when you need to. This could cause an accident.

HOW TO AVOID THE HAZARD

Check the operation of the accelerator pedal before driving. If it does not work smoothly, check for the cause. Correct the problem before operating the vehicle. Consult an authorized dealer if you can't find or solve the problem yourself.

5. OPERATION WARNINGS

WARNING

POTENTIAL HAZARD

Not wearing the seat belt.

Wearing the seat belt improperly.

WHAT CAN HAPPEN

There is increased risk of being killed or seriously injured in an accident.

HOW TO AVOID THE HAZARD

Always wear your seat belt when riding in the vehicle.

Be sure the seat belt is close-fitting across your hips and chest and is latched securely.

WARNING

POTENTIAL HAZARD

Try to stop the tipping vehicle with your arm or leg.

WHAT CAN HAPPEN

You could be severely injured. You could suffer a crushed hand, arm, leg, or foot,

HOW TO AVOID THE HAZARD

You must keep your arms and legs inside the vehicle until it has stopped moving.

As with any off-road-capable vehicle, there is a risk of tip over or rollover under certain conditions. Uneven terrain or slopes which pitch the vehicle sideways, turning too fast or sharp, or a combination of conditions increase the risk of tip over.

If you are in a situation where the vehicle is tipping over, do not put your arm or/ and leg outside the vehicle, do not try to stop tipping with your arm or leg. You could be severely injured. You could suffer a crushed hand, arm, leg, or foot, if part of your body is caught underneath the vehicle.

5. OPERATION WARNINGS

WARNING

POTENTIAL HAZARD

Pinch points.

WHAT CAN HAPPEN

You or someone else could be pinched between the cargo bed and the frame when the bed is being lowered.

HOW TO AVOID THE HAZARD

Before closing the bed, be sure others are standing away from the vehicle. Keep hands and fingers away from the pinch points between the bed and the frame.

WARNING

POTENTIAL HAZARD

Overloading the cargo bed

WHAT CAN HAPPEN

Could cause changes in vehicle handling which could lead to an accident.

HOW TO AVOID THE HAZARD

Never exceed the stated maximum load limit for this cargo bed.

Cargo should be properly distributed and securely attached.

Reduce speed when carrying cargo. Allow greater distance for braking.

WARNING

POTENTIAL HAZARD

Carrying a passenger/ passengers in the cargo bed

WHAT CAN HAPPEN

The passenger(s) could fall, be thrown out, or be struck by objects in the cargo bed.

HOW TO AVOID THE HAZARD

Never carry a passenger/ passengers in the cargo bed. This cargo bed is designed to carry cargo only.

5. OPERATION WARNINGS

WARNING

POTENTIAL HAZARD

Improper shock absorber adjustment.

WHAT CAN HAPPEN

Uneven adjustment can cause poor handling and loss of stability, which could lead to an accident.

HOW TO AVOID THE HAZARD

Always adjust the shock absorbers on the left and right side to the same setting.

WARNING

POTENTIAL HAZARD

Driving with improperly operating brakes.

WHAT CAN HAPPEN

You could lose braking ability, which could lead to an accident.

HOW TO AVOID THE HAZARD

Always check the brakes at the start of every ride. Do not operate the vehicle if you find any problem with the brakes. If a problem cannot be corrected by the adjustment procedures provided in this manual, have the vehicle inspected by an authorized dealer.

WARNING

POTENTIAL HAZARD

Improper charging

WHAT CAN HAPPEN

Damaged battery and car charger，may cause fire and serious injury。

HOW TO AVOID THE HAZARD

Charge with the specified power and plug. Remember to disconnect the power supply after the charging indicator light turn to green.

WARNING

POTENTIAL HAZARD

Operating vehicle without being familiar with all controls.

WHAT CAN HAPPEN

5. OPERATION WARNINGS

Loss of control, which could cause an accident or injury.

HOW TO AVOID THE HAZARD

Read the Owner's Manual carefully. If there is a control or function you do not understand, ask our authorized dealer.

WARNING

POTENTIAL HAZARD

Overloading this vehicle or carrying or towing cargo improperly.

WHAT CAN HAPPEN

Could cause changes in vehicle handling which could lead to an accident.

HOW TO AVOID THE HAZARD

Never exceed the stated load capacity for this vehicle.

Cargo should be properly distributed and securely attached.

Reduce speed when carrying cargo or pulling a trailer. Allow greater distance for braking.

WARNING

POTENTIAL HAZARD

Operating this vehicle with improper modifications.

WHAT CAN HAPPEN

Improper installation of accessories or modification of this vehicle may cause changes in handling which in some situations could lead to an accident.

HOW TO AVOID THE HAZARD

Never modify this vehicle through improper installation or use of accessories. All parts and accessories added to this vehicle should be genuine parts or equivalent components designed for use on this vehicle and should be installed and used according to instructions. If you have questions, consult an authorized dealer.

5. OPERATION WARNINGS

WARNING

POTENTIAL HAZARD

Operating with improperly serviced or adjusted brakes.

WHAT CAN HAPPEN

You could lose braking ability, which could lead to an accident.

HOW TO AVOID THE HAZARD

After servicing:

- Make sure the brakes operate smoothly and that the brake pedal position is correct.
- Make sure the brakes do not drag.
- All air must be bled from the brake system.

Replacement of brake components requires professional knowledge. These procedures should be performed by an authorized dealer.

WARNING

POTENTIAL HAZARD

Operating/ riding this UTV without wearing an approved helmet, eye protection and protective clothing.

WHAT CAN HAPPEN

Operating/ riding without an approved helmet increases your chances of a severe head injury or death in the event of an accident.

Operating/ riding without eye protection can result in an accident and increases your chances of a severe injury in the event of an accident.

HOW TO AVOID THE HAZARD

Always wear an approved helmet which fits properly.

You should also wear: eye protection (goggles or face shield); gloves; boots; long-sleeved shirt or jacket; and long pants.

WARNING

POTENTIAL HAZARD

Operating this UTV after consuming alcohol or drugs.

WHAT CAN HAPPEN

Could seriously affect your judgment.

Could cause you to react more slowly.

5. OPERATION WARNINGS

Could affect your balance and perception.
Could result in an accident.

HOW TO AVOID THE HAZARD

Never consume alcohol or drugs before or while driving this UTV.

WARNING

POTENTIAL HAZARD

Operating this UTV at excessive speeds.

WHAT CAN HAPPEN

Increases your chances of losing control of the UTV, which can result in an accident.

HOW TO AVOID THE HAZARD

Always travel at a speed which is proper for the terrain, visibility and operating conditions; and your experience.

WARNING

POTENTIAL HAZARD

Attempting wheelies, jumps and other stunts.

WHAT CAN HAPPEN

Increases the chance of an accident, including an overturn.

HOW TO AVOID THE HAZARD

Never attempt stunts, such as wheelies or jumps.

WARNING

POTENTIAL HAZARD

Failure to inspect the UTV before operating.
Failure to properly maintain the UTV.

WHAT CAN HAPPEN

Increases the possibility of an accident or equipment damage.

HOW TO AVOID THE HAZARD

Always inspect your UTV each time you use it to make sure the UTV is in safe operating condition.
Always follow the inspection and maintenance procedures and schedules described in the Owner's Manual.

5. OPERATION WARNINGS

WARNING

POTENTIAL HAZARD
Removing hands from steering wheel or feet from footrests during operation.
WHAT CAN HAPPEN
Removing even one hand or foot can reduce your ability to control the UTV or could cause you to lose your balance and fall off the UTV.

HOW TO AVOID THE HAZARD
Always keep both hands on the steering wheel and both feet on the footrests of your UTV during operation.

WARNING

POTENTIAL HAZARD
Failure to use extra care when operating this UTV on unfamiliar terrain.
WHAT CAN HAPPEN
You can come upon hidden rocks, bumps, or holes, without enough time to react.
Could result in the UTV overturning or going out of control.
HOW TO AVOID THE HAZARD
Go slowly and be extra careful when operating on unfamiliar terrain.
Always be alert to changing terrain conditions when operating the UTV.

WARNING

POTENTIAL HAZARD
Failure to use extra care when operating on excessively rough, slippery or loose terrain.
WHAT CAN HAPPEN
Could cause loss of traction or vehicle control, which could result in an accident, including an overturn.
HOW TO AVOID THE HAZARD
Do not operate on excessively rough, slippery or loose terrain until you

have learned and practiced the skills necessary to control the UTV on such terrain.
Always be especially cautious on these kinds of terrain.

WARNING

POTENTIAL HAZARD
Turning improperly.
WHAT CAN HAPPEN
UTV could go out of control, causing a collision or overturn.
HOW TO AVOID THE HAZARD
Always follow proper procedures for turning as described in the Owner's Manual.
Practice turning at low speeds before attempting to turn at faster speeds.
Do not turn at excessive speed.

WARNING

POTENTIAL HAZARD
Operating on excessively steep hills.
WHAT CAN HAPPEN
The vehicle can overturn more easily on extremely steep hills than on level surfaces or small hills.
HOW TO AVOID THE HAZARD
Never operate the UTV on hills too steep for the UTV or for your abilities.
Practice on smaller hills before attempting large hills.
Never operate UTV on hills steeper than 15%.

WARNING

POTENTIAL HAZARD
Going down a hill improperly.
WHAT CAN HAPPEN
Could cause loss of control or cause UTV to overturn.
HOW TO AVOID THE HAZARD
Always follow proper procedures for going down hills as described in the Owner's Manual. NOTE: A special technique is required when

braking as you go downhill.
Always check the terrain carefully before you start down any hill.
Never go down a hill at high speed.
Avoid going down a hill at an angle which would cause the vehicle to lean sharply to one side. Go straight down the hill where possible.

WARNING

POTENTIAL HAZARD
Improperly crossing hills or turning on hills.
WHAT CAN HAPPEN
Could cause loss of control or cause UTV to overturn.
HOW TO AVOID THE HAZARD
Never attempt to turn the UTV around on any hill until you have mastered the turning technique as described in the Owner's Manual on level ground. Be very careful then turning on any hill.
Avoid crossing the side of a steep hill if possible.
When crossing the side of a hill:
Always follow proper procedures as described in the Owner's Manual.
Avoid hills with excessively slippery or loose surfaces.

WARNING

POTENTIAL HAZARD
Stalling, rolling backwards or improperly dismounting while climbing a hill.
WHAT CAN HAPPEN
Could result in UTV overturning.
HOW TO AVOID THE HAZARD
Maintain steady speed when climbing a hill.
If you lose all forward speed:
Keep weight uphill.
Apply the brakes.
Lock parking brake after you are stopped.
If you begin rolling backwards:
Keep weight uphill; never apply engine power.
Apply the brake gradually.
When fully stopped, apply rear brake as well, and then lock parking

5. OPERATION WARNINGS

brake.
Dismount on uphill side, or to either side if pointed straight uphill.

WARNING

POTENTIAL HAZARD
Improperly operating over obstacles.
WHAT CAN HAPPEN
Could cause loss of control or a collision. Could cause the UTV to overturn.
HOW TO AVOID THE HAZARD
Before operating in a new area, check for obstacles.
Use extreme caution when riding over large obstacles, such as large rocks or fallen trees.
If you cannot avoid obstacles, always follow proper procedures as described in the Owner's Manual.

WARNING

POTENTIAL HAZARD
Skidding or sliding,
WHAT CAN HAPPEN
You may lose control of the UTV.
You may also regain traction unexpectedly, which may cause the UTV to overturn.
HOW TO AVOID THE HAZARD
On slippery surfaces, such as ice, go slowly and be very cautious in order to reduce the chance or skidding or sliding out of control.

WARNING

POTENTIAL HAZARD
Operating this UTV through deep or fast flowing water.
WHAT CAN HAPPEN
May causing electric motor or cable short circuit and loss of control, which could lead to an accident.

5. OPERATION WARNINGS

HOW TO AVOID THE HAZARD

Never operating the UTV through water which exceeds the recommended maximum depth in this manual.

WARNING

POTENTIAL HAZARD

Improperly operating in reverse,

WHAT CAN HAPPEN

You could hit an obstacle or person behind you, resulting in severe injury.

HOW TO AVOID THE HAZARD

When you select reverse gear, make sure there are no obstacles or people behind you. When it is safe to proceed, go slowly.

WARNING

POTENTIAL HAZARD

Operating this UTV with improper tires, or with improper or uneven tire pressure.

WHAT CAN HAPPEN

Use of improper tires on this UTV, or operation of this UTV with improper or uneven tier pressure, may cause loss of control, and increases the risk of an accident.

HOW TO AVOID THE HAZARD

Always use the size and type ties specified in the Owner's Manual for this vehicle.

Always maintain proper tire pressure a described in the Owner's Manual.

Use proper pressures stated on the side wall of the tire when seating the tire beads. Higher pressures may cause the tire to burst. Inflate the tires very slowly and carefully. Fast inflation could cause the tire to burst.

WARNING

5. OPERATION WARNINGS

After a rollover or an accident, have a qualified service dealer check the complete machine including, but not limited to, brakes, throttle and steering for possible damage.

WARNING

Safe operation of this rider active vehicle requires good judgment and physical skills. Persons with cognitive or physical disabilities who operate this vehicle have an increased risk of overturns and loss of control which could result in severe injury or death.

6. V.I.N. AND MOTOR NUMBER

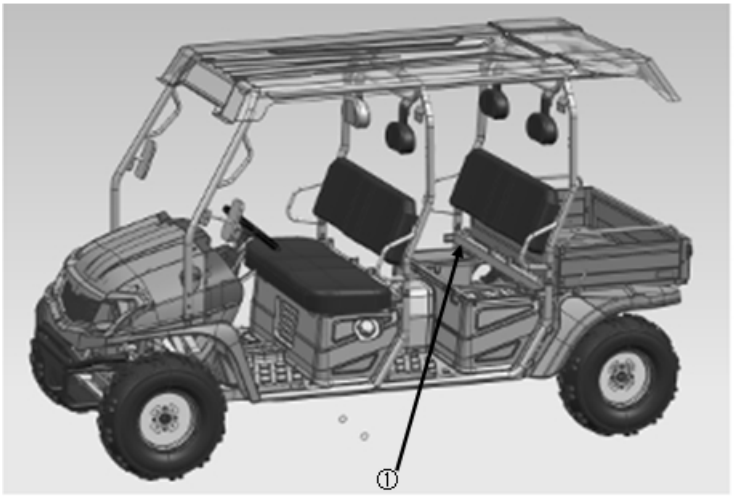

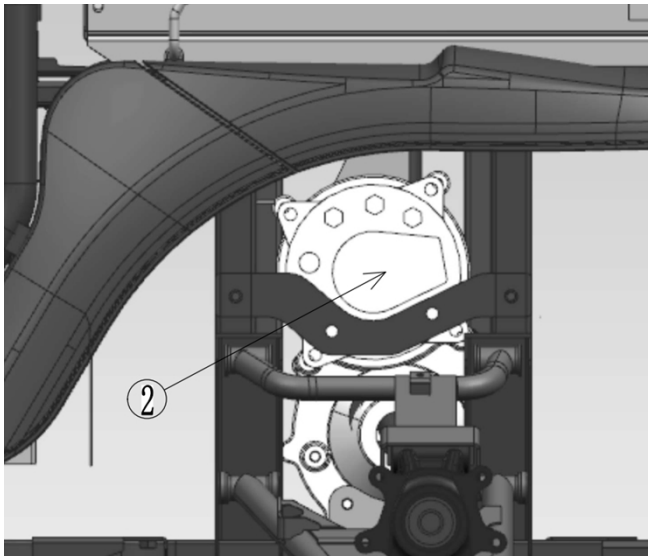

Record these numbers from your UTV in the spaces provided.

1. Frame VIN (found on the rear left of the frame tube)

2. Motor Serial Number (Left side of motor crankcase)

6. V.I.N. AND MOTOR NUMBER

The vehicle frame and motor serial numbers are important for model identification when registering your vehicle, obtaining insurance or whenever replacement parts are required. In the event your vehicle were stolen these numbers are essential to the recovery and identification of your UTV.

7. CONTROL AND PARTS FUNCTIONS

ELECTRICAL SWITCHES

Switch On Panel

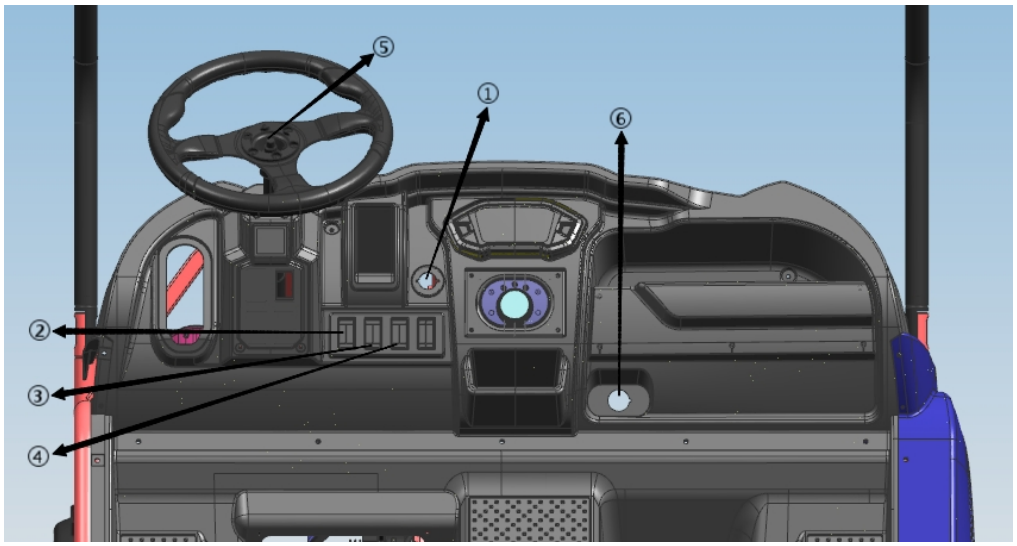

1, Main Switch 2, Light Switch 3, Hi/ Lo Beam Switch 4, Turn Light Switch 5,Horn Switch 6, Accessory Sock

1. Main Switch
   Functions of the respective switch positions are as follows:
   ON: All electrical circuits are supplied with power.
   OFF: All electrical circuits are switched off. The key can be removed in this position.
2. Light Switch --Turn on the headlight and rear position lights.
3. Hi/ Lo Beam Switch --Shift the high and low beam of headlight.
4. Turn Light Switch-- Turn on the left/right turn light
5. Horn Switch--Open the horn
6. See "**ACCESSORY SOCKET**".

7. CONTROL AND PARTS FUNCTIONS

LCD METER

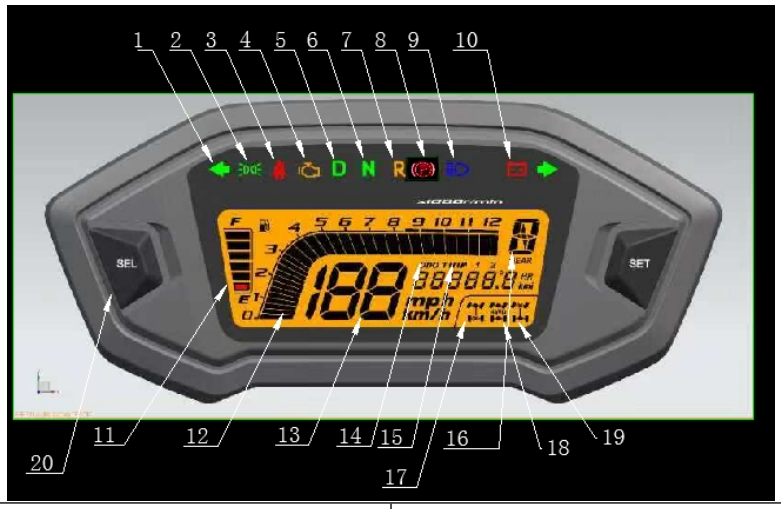

1. Turn Left Indicator	11.Power segment code identification
2. Light switch indicator	12.Power segment code identification
3. Seat belt indication	13.Speed display
4.Controller Failure Lamp	14.Total odometer
5.Forward gear indicator	15.Small odometer
6.Neutral indicator	16.Gear display
7.Reverse indicator	17.Rear differential lock
8.Parking indicator	18.Four-wheel drive mode identification
9.Far-light marking	19.Front differential lock
10.Low Volume Indicator	20.Functional keys

Fault number	Fault
P001	High pedal failure
P002	Precharge fault
P003	Overcurrent
P004	Controller overheating
P006	Failure of current sampling circuit
P008	BMS malfunction
P009	Battery undervoltage
P010	Battery overvoltage
P011	Motor overheating
P013	Accelerator failure

7. CONTROL AND PARTS FUNCTIONS

INSTRUMENT OF THE FUNCTION BUTTON

1.When the main switch open, the meter is on Self checking status, press the button for 5s can make km-mile exchange.

2. In the meter working status, press the button can choose the short mileage and total mileage.

3. In the display of short mileage, press the button for 3s can cleared the mileage.

ACCESSORY SOCKET

The accessory socket (1) is attached to the left side of the front cover. You can use the accessory socket to power a trouble light, spotlight, CB radio, or cell phone etc.

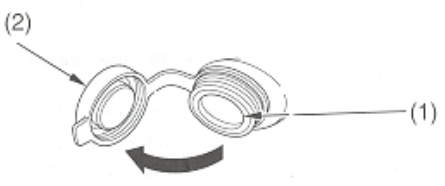

(1) accessory socket (2) cap

CAUTION

Do not plug in any heat-generating accessory such as an automobile cigarette lighter because it damages the socket.

To use the accessory socket, start the engine. Then turn the headlights OFF, and open the accessory socket cap (2).

Be sure the engine is on and the headlights are turned off before using the accessory socket, otherwise you may drain the battery.

The accessory socket is rated capacity is DC 12V. 120 Watts (10A) or less. If you exceed this limit, you may blow a fuse.

When you are done using an accessory, unplug it, and cover the socket with the cap.

Be careful not to flood this accessory socket when washing your UTV.

7. CONTROL AND PARTS FUNCTIONS

ELECTRIC ACCELERATION PEDAL

WARNING

Before starting the engine, check the accelerator pedal to be sure it is operating smoothly.
Make sure the accelerator pedal fully returns to the idle position as soon as it is released.

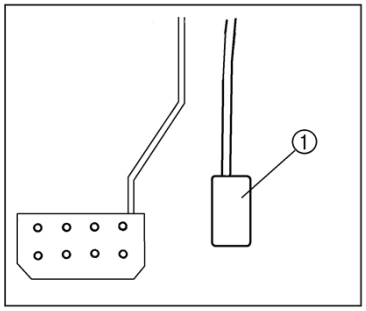

1. Electric acceleration pedal

Operating voltage： DC 5V output signal：DC0.9~4.0V

You must fully release the electric acceleration pedal firstly when you want to change the gear, otherwise, the motor will not work.

WARNING

POTENTIAL HAZARD
Malfunction of the electric acceleration pedal.
WHAT CAN HAPPEN
The electric acceleration pedal could be hard to operate, making it difficult to speed up or slow down when you need to. This could cause an accident.
HOW TO AVOID THE HAZARD
Check the operation of the electric acceleration pedal before you start the engine. If it does not work smoothly, check for the cause. Correct the
problem before operating the vehicle. Consult the authorized dealer if you can't find or solve the problem yourself.

7. CONTROL AND PARTS FUNCTIONS

BRAKE PEDAL

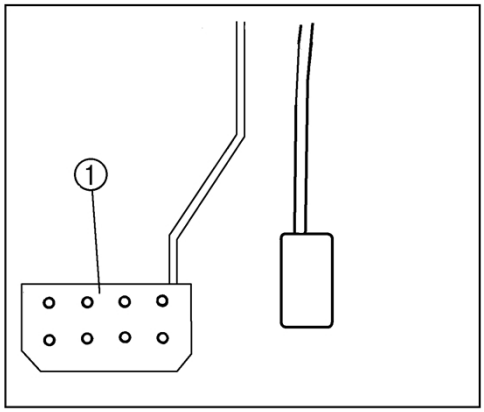

1.Brake pedal

Press the brake pedal to slow or stop the vehicle.

WARNING

Never operate the UTV with a spongy feeling brake pedal. Operating the UTV with a spongy brake pedal can result in loss of braking. Loss of braking could cause an accident.

PARKING BRAKE LEVER

The parking brake lever is located at the left hand of the steering wheel . It will help hold the vehicle from moving while parked. To set the parking brake, pull the lever up completely. The parking indicator light will come on if the main switch is on. To release the parking brake, pull up on the lever, press the release button, and then push the lever all the way down. Be sure to fully release the parking brake before starting out. Failure to do so may result in poor performance and premature wearing of the parking brake and V-belt.

1. Release button
2. Parking brake lever

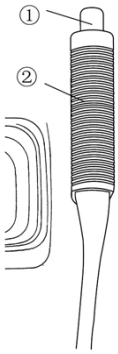

7. CONTROL AND PARTS FUNCTIONS

ELECTRONIC SHIFT

The electronic shift lever is located at the below the instrument panel. The electronic shift lever has three positions: F-N-R

CAUTION

Please switch gear in the case of the vehicle to remain stationary.

SEATS

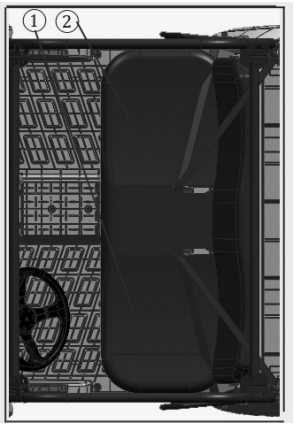

1.Drive seat
2.Passenger seat

To remove a seat, lift the front of the seat, and then slide the seat up and forward.

To install a seat, insert the projections on the rear of the seat into the seat holders and push down on the seat at the front.

7. CONTROL AND PARTS FUNCTIONS

WARNING

POTENTIAL HAZARD

A loose seat.

WHAT CAN HAPPEN

The operator could lose control or the operator or passenger could fall if the seat is loose during operation.

HOW TO AVOID THE HAZARD

Make sure the seat is securely latched.

SEAT BELTS

This vehicle is equipped with three-point seat belts for both the operator and passenger. Always wear the seat belt while riding in the vehicle.

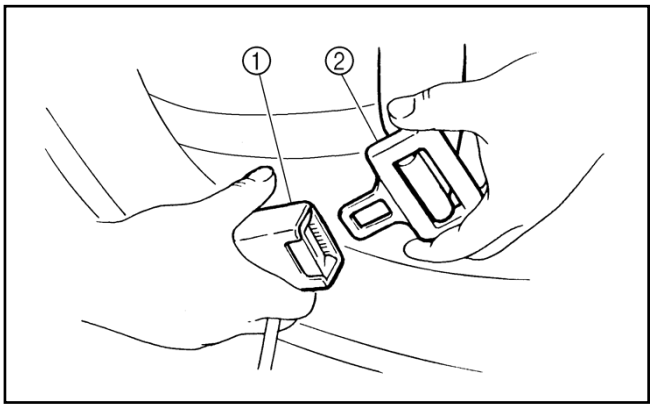

1. Buckle
2. Latch plate

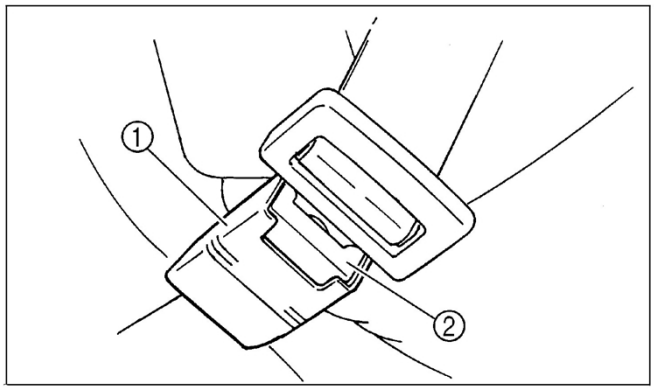

1. Buckle

2.Release button

7. CONTROL AND PARTS FUNCTIONS

To Wear The Seat Belt Properly, do the following:
1. Hold the latch plate as you pull the belt across your lap and chest. Make sure the belt is not twisted and is not caught on any portion of the vehicle, your clothing, or any equipment you are carrying.
2. Push the latch plate into the buckle until it clicks. Pull up on the latch plate to make sure it is secure.
3. Put the lap portion of the belt low on your hips. Push down on the buckle end of the belt as you pull up on the shoulder part so the belt is snug across your hips.
4. Position the shoulder belt over your shoulder and across your chest. The shoulder belt should fit against your chest. If it is loose, pull the belt out all the way and then let it retract.

To Release The Buckle, firmly press the release button.

WARNING

POTENTIAL HAZARD
Not wearing the seat belt.
Wearing the seat belt improperly.
WHAT CAN HAPPEN
There is increased risk of being killed or seriously injured in an accident.
HOW TO AVOID THE HAZARD
Always wear your seat belt when riding in the vehicle.
Be sure the seat belt is close-fitting across your hips and chest and is latched securely.

7. CONTROL AND PARTS FUNCTIONS

CAUTION

To protect from damage, do not put metal products, like tools or sharply edged products directly in the glove compartment. If they must be stored, wrap them in appropriate cushion material.

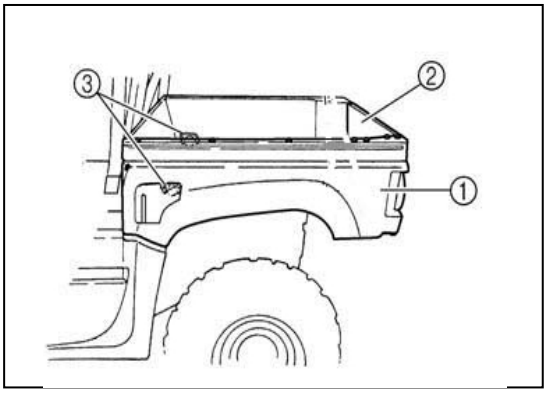

CARGO BED

1.Cargo bed
2.Tailgate
3.Cargo hook

Lifting And Lowering The Cargo Bed

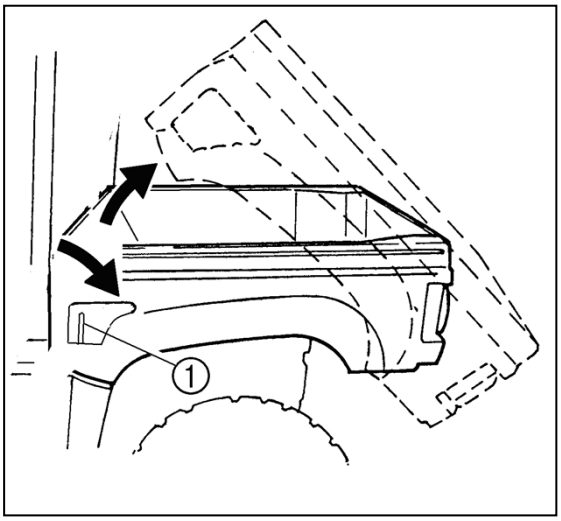

1.Cargo bed release lever

To lift
Push down the cargo bed release lever on the left or right side of the vehicle, and then slowly lift up the cargo bed until it stops.
To lower
Lower the cargo bed slowly to its original position and be sure that it is locked into place.

7. CONTROL AND PARTS FUNCTIONS

WARNING

POTENTIAL HAZARD

Pinch points.

WHAT CAN HAPPEN

You or someone else could be pinched between the cargo bed and the frame when the bed is being lowered.

HOW TO AVOID THE HAZARD

Before closing the bed, be sure others are standing away from the vehicle. Keep hands and fingers away from the pinch points between the bed and the frame.

Load Limit

Maximum load limit: 200 kg (441 lb)

WARNING

POTENTIAL HAZARD

Overloading the cargo bed

WHAT CAN HAPPEN

Could cause changes in vehicle handling which could lead to an accident.

HOW TO AVOID THE HAZARD

Never exceed the stated maximum load limit for this cargo bed. Cargo should be properly distributed and securely attached. Reduce speed when carrying cargo. Allow greater distance for braking.

WARNING

POTENTIAL HAZARD

Carrying a passenger/ passengers in the cargo bed

WHAT CAN HAPPEN

The passenger(s) could fall, be thrown out, or be struck by objects in the cargo bed.

HOW TO AVOID THE HAZARD

Never carry a passenger/ passengers in the cargo bed. This cargo bed is designed to carry cargo only.

---

7. CONTROL AND PARTS FUNCTIONS

TRAILER HITCH BRACKET

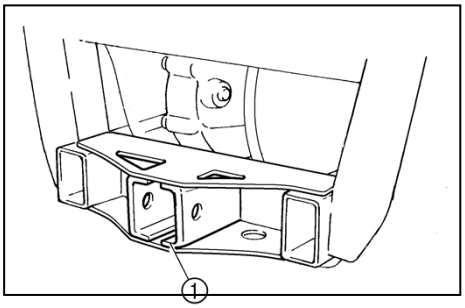

1.Trailer hitch bracket
This vehicle is equipped with a receiver bracket for a standard trailer hitch.

Emergency power-off switch
Location in the outside of the frame, under the seat.
Use for Controlling the on-off of power circuit

Status :	push	ON
	pull	OFF

DC-DC Converter

Location in the left side of the frame, under the seat
Use for Convert 72V from battery to 13.5V. It can make sure the meter and light on cart working normally when the batteries undervoltage.

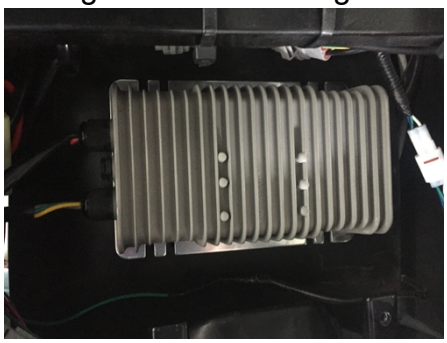

8. RIDING WEAR

SAFE RIDING WEAR

Always wear clothing suite to the type of riding you are doing. UTV riding requires special protective clothing which will make you fell more comfortable and reduce chances of injury.

1. Helmet

Your helmet is the most important piece of protective gear for safe riding. A helmet can prevent a severe head injury.

Select an approved off-road motorcycle -type helmets that fits properly.

2. Eye Protection

A pair of goggles or helmet face shield offer the best protection for your eyes.

3. Gloves (off-road style)

4. Boots

A pair of strong over the calf type boots with heels, such as motocross boots.

5. Clothing

To protect your body, long sleeves and pants should always be worn. Riding pants with kneepads, a jersey and shoulder pads provide the best protection.

8. RIDING WEAR

WARNING

POTENTIAL HAZARD
Operating this vehicle without wearing an approved motorcycle helmet, eye protection, and protective clothing.
WHAT CAN HAPPEN
Operating without an approved motorcycle helmet increases your chances of a severe head injury or death in the event of an accident. Operating without eye protection can result in an accident and increases your chances of a severe injury in the event of an accident.
HOW TO AVOID THE HAZARD
Always wear an approved motorcycle helmet that fits properly. You should also wear: eye protection (goggles or face shield), gloves, boots, long-sleeved shirt or jacket long pants.

9. CARRYING LOADS

CARRYING LOADS

Cargo or a trailer can change the stability and handling of a vehicle. You must use common sense and good judgment when carrying cargo or towing a trailer. Keep the following points in mind:

- Never exceed the weight limits shown. An overloaded vehicle can be unstable.

MAXIMUM LOADING LIMIT
Cargo bed: 200 kg (441 lb)
Trailer hitch:
Pulling load (total weight of trailer and cargo): 200 kgf (450 lbf)
Tongue weight (vertical weight on trailer hitch point): 11 kgf (25 lbf)

- Choose a trailer hitch drawbar designed for use with a 5 cm (2 in) receiver.
- Load cargo in the cargo bed as close to the center of the vehicle as possible and tie it down using the cargo hooks equipped on the cargo bed.
- Tie down cargo securely in the trailer. Make sure cargo in the trailer cannot move around. A shifting load can cause an accident.
- Make sure the load does not interfere with controls or your ability to see where you are going.
- Drive more slowly than you would without a load. The more weight you carry, the slower you should go. Although conditions vary, it is good practice not to exceed low range whenever you are carrying heavier loads or when towing a trailer.

9. CARRYING LOADS

- Allow more braking distance. A heavier vehicle takes longer to stop.
- Avoid making sharp turns unless at very slow speeds.
- Avoid hills and rough terrain. Choose terrain carefully. Added weight affects the stability and handling of the vehicle.
- Avoid overloading this vehicle or carrying or towing cargo improperly.
- Avoid carrying a passenger in the cargo bed.

10. BATTERY

SPECIFICATIONS

DC 72V 140Ah (6×12V) Lead acid battery

Check for appearance and connection

1.The shell, cover of the battery has no swelling, acid leakage or damage.

2, Check whether the battery is dirt;

3. Check whether the connection wire or terminal is rusty

4. Check whether the connection bolt is loose

Avoid short circuit

NOTE

The short circuit current can reach up to thousands of ampere,. As a result, a large amount of heat is generated in the connecting part of the short circuit, it will damage the battery, leakage of liquid and even explosion, cause serious injury or death.

In order to avoid short circuit, you need to be extra careful when you Install or remove batteries and using insulation tools. The cable for connecting the battery cannot placed casually, it may cause short circuit.

The battery terminal screws should be covered by insulating cap. Arrangement of cable should void overlapping pressure to produce a breakdown.

10. BATTERY

CHARGING

The car charger is under the cargo bed and the charging socket located on the left side under the seat.

Each car is equipped with a charging plug. Please use the original charging plug.

Check the charging plug and charging socket whether these is damaged or water stains, to prevent short circuits.

There has a charging indicator on instrument panel to indicates charging capacity.

charging capacity: RED (<80%)

YELLOW(>80%)

GREEN (100%)

Maintain

1.Do not allow the battery to be in a state of loss for a long time, it will decrease the capacity of the battery and affect the service life seriously.

2. If you find mileage significantly reduced， check the voltage of each battery using a universal meter. In usually, one single battery voltage will reach more than 13.1V in the state of full power. If one of the battery voltage has been significantly lower than the other batteries, please go to the authorized dealer for inspection and maintenance.

3 avoid exposure in the sun

The sun exposure will increase the temperature of the battery, increase the amount of water loss, thereby affecting the battery life.

4. Electric vehicles should be slow to accelerate in the start. If you step on the accelerator pedal to the end at first time, it will cause the battery

10. BATTERY

discharge is too fast, thereby reduction of battery life..

5. In winter, the battery capacity decreases with the decrease of temperature, which is a normal phenomenon. To 68℉ as the standard，battery capacity will drop to 80% in 14°F.

6. Keep the battery surface clean, vehicle parking should be parked in a cool ventilated place.

7.Please charge the battery to full before you need place the vehicle for a long time and charging one time at least each month.

8. The original car charger is through the battery matching, do not replace the charger arbitrarily.

11. MAINTENANCE

CAUTION

Due to the nature of the adjustments marked with a **D** on the following chart, it is recommended that service be performed by an authorized dealer.

- More often under severe use, such as dirty or wet conditions to purge water or dirt contamination from grease fittings and other critical components.

PERIODIC MAINTENANCE SCHEDULE

Careful periodic maintenance will help keep your vehicle in the safest, most reliable condition. Inspection, adjustment and lubrication intervals of important components are explained in the following chart on the following pages.

NOTE:

Maintenance intervals are based upon average riding conditions and an average vehicle speed of approximately 16 km/ 10 miles per hour.
However, keep in mind that if the vehicle isn't used for a long period of time, the month maintenance intervals should be followed.
Vehicles subjected to severe use, such as operation in wet or dusty areas, should be inspected and serviced more frequently.

Inspect, clean, lubricate, adjust or replace parts as necessary.

NOTE:

Inspection may reveal the need for replacement parts. Always use genuine parts available from your dealer.

Service and adjustments are critical. If you are not familiar with safe service and adjustment procedures, have a qualified dealer perform these operations.

11. MAINTENANCE

	Item	Hours	When	Remarks
●	Brake System	Pre-ride	Pre-ride	Pre-ride inspection item
	Electronic Accelerator pedal	Pre-ride	Pre-ride	Pre-ride inspection item
●	Tires	Pre-ride	Pre-ride	Inspect daily, pre-ride inspection item
●	Front and Rear Wheels/ Hubs	Pre-ride	Pre-ride	Pre-ride inspection item
●	Steering	Pre-ride	Pre-ride	Inspect daily, lubricate
D	Wheels bearings	10 hrs	Monthly	Check for looseness/ damage. Replace if damaged.
	Frame nuts, bolts fasteners	Pre-ride	Pre-ride	Pre-ride inspection item
	Headlamp Inspection	Daily	Daily	Check operation daily; apply dielectric grease to connector when replaced
	Tail/ indicator lamp inspection	Daily	Daily	Check operation daily; apply dielectric grease to socket when replaced
●	Air Filter-Main Element	Weekly	Weekly	Inspect –Replace if necessary
●	Transmission Oil Level	20 hrs	Monthly	Inspect monthly; change annually
	Battery	Monthly	Monthly	Check/clean Terminals; Check damage and deformation
D	Brake pad wear	10 hrs	Monthly	Inspect periodically
●	Rear Gear case Oil	100 hrs	Monthly	Check monthly and change annually
●	General Lubrication	50 hrs	3 months	Lubricate all fittings, pivots, cables, etc.
D	Throttle Cable/ Accelerator pedal	20 hrs	monthly	Inspect –adjust, lubricate, replace if necessary; pre-ride inspection item
D	Steering system	50 hrs	6 months	Check operation and for looseness, worn, damage, binding feeling / Adjust, repair, Replace if necessary. Check toe alignment /Adjust if necessary.

11. MAINTENANCE

D	Front Axle	10 hrs	Monthly	Check for/ Bearing seals/ looseness/ damage.
●	Rear Axle	50 hrs	6 months	Inspect bearings, Lube
●	Front Prop Shaft & Shaft Yoke	50 hrs	6 months	Check for looseness/ damage.
●	Rear Prop Shaft, Shaft Yoke & Boots	50 hrs	6 months	Check for/ boots/ looseness/ damage.
●	Front Suspension	50 hrs	6 months	Inspect-lubricate, tighten fasteners
●	Rear Suspension	50 hrs	6 months	Inspect, tighten fasteners
D	Brake fluid	200 hrs	24 months	Change every two years
	Headlight Aim	As required	As required	Adjust if necessary
●	Car charger	Monthly	Monthly	Check for heat/ cleanliness Avoid water entry

LUBRICATION RECOMMENDATIONS

	Item	Lube Rec	Method	Frequency
	2.Brake Fluid	DOT 3 Only	Maintain level Between fill lines. See "7.CONTROL"	As require; change every two years or 200 hours
	3.Transmission Oil	SAE 80W/90GL5	Add to proper level on dipstick	Change annually or at 100 hours

	Item	Lube Rec	Method	Frequency
●	6.Steering system	Grease	Lubricate the pivoting and sliding parts	Every 3 months or 50 hours
●	7.Tie rods	Grease	Grease	Semi-annually
●	8.Shift Linkages	Grease	Locate fittings and Grease	Semi-annually
●	9.Front Wheel bearings	Inspect	Inspect and replace bearings if necessary	Semi-annually

11. MAINTENANCE

●	10.Ball joints	Grease	Inspect, Locate fittings and Grease, or replace it if necessary	Semi-annually
●	11.Prop Shaft & Shaft Yoke, Spline Joint	Grease	Locate fitting and Grease	Semi-annually
●	12.Rear Axle Bearing	Grease	Grease	Every 3 months or 50 hours

NOTE:

1. More often under severe use, such as wet or dusty conditions .
2. Grease: Light weight lithium-soap grease.
3. Grease M：molybdenum disulfide(MoS_2) grease(water resistant).
4. *When suspension action becomes stiff or after washing.
5. Hours are based on 10 mph(16Km/h) average.

PERIODIC MAINTENANCE RECORD

Use the following chart to record periodic maintenance work：

Maintenance Interval Performed	**Servicing Date**	**Servicing Dealer or Person**	**Remarks**
First 5 Hrs			
10 Hrs			
15 Hrs			
20 Hrs			
25 Hrs			
50 Hrs			
75 Hrs			
100 Hrs			

11. MAINTENANCE

The following items should be checked occasionally for tightness; or if they have been loosened for maintenance service.

WHEEL NUT TORQUE SPECIFICATIONS

Bolt Size	Specification	
M12X1.25	50Ft.Lbs	69N.m

NOTE: All nuts that have a cotter pin installed must be serviced by an authorized Dealer.

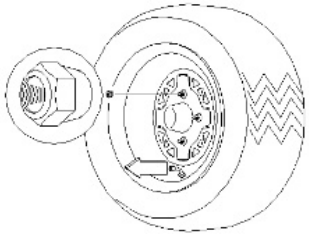

Rear Tapered nuts: install with tapered side against wheel

AXLE BOOTS

- Front Shaft Boots,
- Rear Axle (CV Joints,) Boots,

Check the protective boots for holes or tears. If any damage is found, have them replaced by an authorized dealer.

11. MAINTENANCE

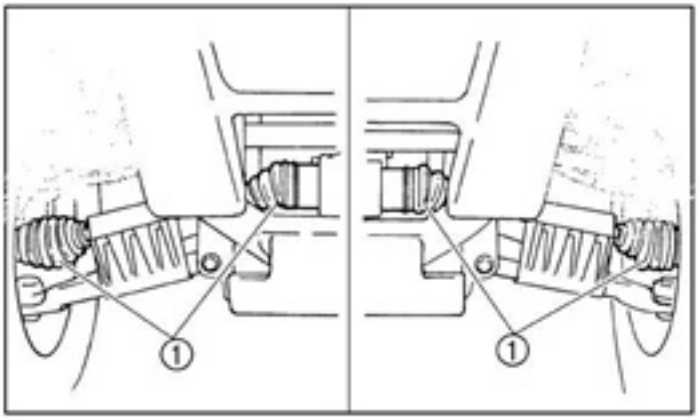

REAR SPRING ADJUSTMENT

The rear shock absorber spring is adjusted by rotating the adjuster in the direction required to increase or decrease spring tension.

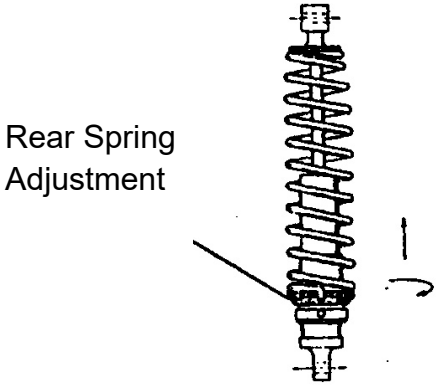

STEERING

Steering Inspection

The steering assembly of the machine should be checked periodically for loose nuts and bolts, worn tie rod ends, worn boots, and damage. Checking routing of all cables, hoses, and wiring to be sure the steering mechanism is not restricted or limited. If any found, have your dealer repair them before riding your vehicle.

The steering assembly should be also checked periodically for free operation, steering should move freely through entire range of travel without binding. Park on level ground. Turn the steering wheel right and left. Check for excessive free play, abnormal noises, or a rough feeling. Have an authorized dealer repair as necessary for proper operation.

11. MAINTENANCE

Lubricate the pivoting parts.

Recommended lubricant:
Lithium-soap-based grease

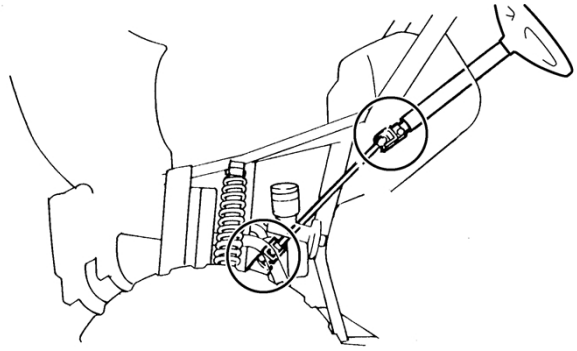

CAMBER AND CASTER

The camber and caster are non-adjustable.

TOE ALIGNMENT CHECK

WARNING

Do not attempt to adjust the tie rod for toe alignment. Severe injury or death can result from improper adjustment.
Contact your dealer. He/she has the training and tools to Make these adjustment.

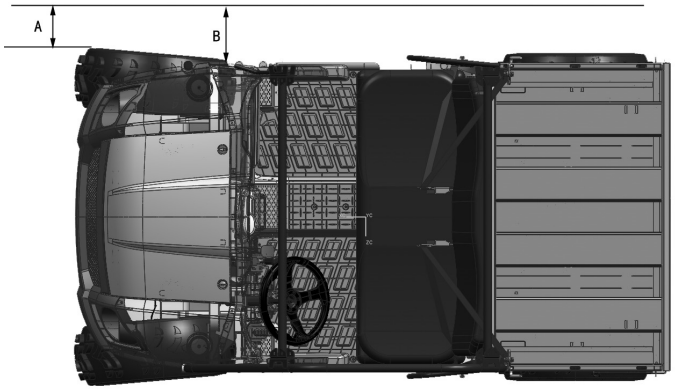

The recommended toe alignment is 1/8"to 1/4"(3to6mm) toe out.

1. Set the steering wheel in a straight ahead position and hold them in this position.
2. Measure A and B, B minus A should be 1/16" to 1/8" (1.5 to 3mm).
3. If this measurement needs to be adjusted, contact your dealer for

service.

WARNING

If the tie rod is positioned incorrectly or adjusted incorrectly, it will not pivot, may break, and may separate. Severe injury or death can result

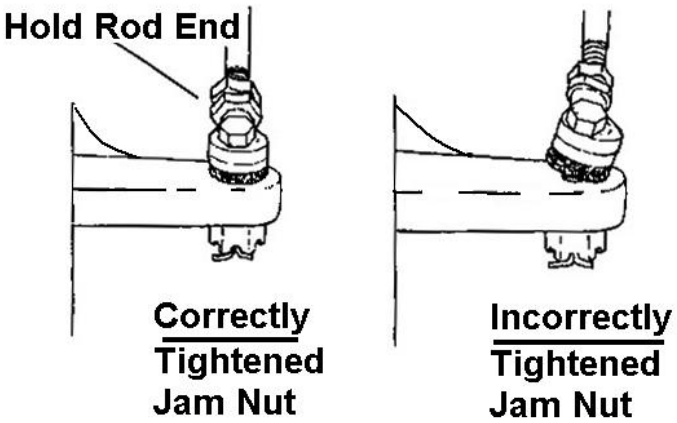

BRAKES

Front brake

WARNING

Once a bottle of brake fluid is opened, use what is necessary and discard the rest. Do not store or use a partial bottle of brake fluid. Brake fluid is hygroscopic, meaning it rapidly absorbs moisture from the air. This causes the boiling temperature of the brake fluid to drop, which can lead to early brake fade and the possibility of serious injury.

The front brake is hydraulic disc brakes which is depressing the brake pedal. These brakes are self-adjusting and require no adjustment.
The following checks are recommended to keep the brake system in good operating condition. How often they need checking depends upon the type of driving that has been done.

- Keep fluid level in the master cylinder reservoirs as described see "7.Control and part functions". Normal functioning of the diaphragm is to extend into the reservoir as fluid lever drops. If the fluid lever is low and

11. MAINTENANCE

the diaphragm is not extended, a leak is indicated and the diaphragm should be replaced. Always fill the reservoir as indicated whenever the cover is loosened or removed to insure proper diaphragm operation. Use DOT 3 brake fluid.

- Check brake system for fluid leaks.
- Check brake for excessive travel or spongy feel.
- Check friction pads for wear, damage and loosened.
- Check security and surface condition of the disc.
- Pads should be changed when friction material is worn to 3/64"(1mm).(A)

Rear Brake

- The rear brake is a hydraulic disc type brake which is activated by the same pedal which activates the front brake system is self adjusting and requires no maintenance other than periodic checks of the pads for wear
- Pads should be changed when the friction material is worn to 3/64"(1mm).
- Inspect the brake disc and pad wear surface for excessive wear.

Checking the brake fluid level

Insufficient brake fluid may let air enter the brake system, possibly causing the brakes to become ineffective. Before riding, check that the brake fluid is above the minimum level mark and replenish if necessary. A low brake fluid level may indicate worn brake pads and/or brake system leakage. If the brake fluid level is low, be sure to check the brake pads for wear and the brake system for leakage.

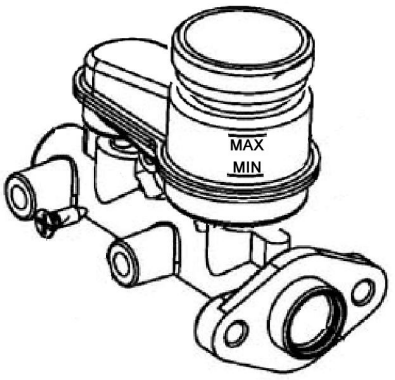

The brake fluid reservoir is located under the hood.

- When checking the fluid level, make sure the top of the brake fluid reservoir is level.

11. MAINTENANCE

- Use only the recommended quality brake fluid. Otherwise, the rubber seals may deteriorate, causing leakage and poor braking performance.

  Recommended brake fluid: DOT 3
- Refill with the same type of brake fluid. Mixing fluids may result in a harmful chemical reaction and lead to poor braking performance.
- Be careful that water does not enter the brake fluid reservoir when refilling. Water will significantly lower the boiling point of the fluid and may result in vapor lock.
- Brake fluid may deteriorate painted surfaces or plastic parts. Always clean up spilled fluid immediately.
- Have an authorized dealer inspect the brake system if the brake fluid level goes down.

LIGHTS

WARNING

Keep your headlights and taillights clean. Poor light while riding can result in an accident causing severe injury or death.

CAUTION

Do not service while headlight is hot. Serious burns may result.
Do not touch a halogen lamp with bare fingers. Oil from your skin leaves a residue, causing a hot spot which will shorten the life of the lamp.

Headlight Lamp Replacement

1. Use bulb 12V 35W/35W.
2. Pull the cable plug off the conducting strip in the socket, remove the clip before dismounting the bulb.
3. Fit a new bulb into the socket, sitting properly in the three slots, install the clip as shown in the fig. and connect the cable plug to the conducting strip.

11. MAINTENANCE

4. Change the bulb.

Taillight / Brake light Lamp Replacement

If the taillight / brake light does not work the lamp may need to be replaced.

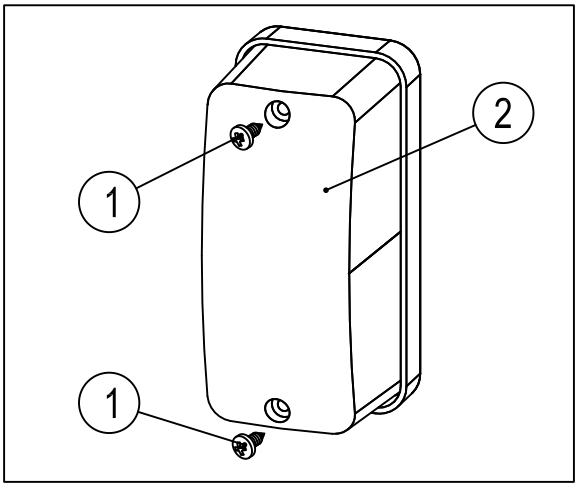

1. Screw
2. Lens

1. Remove the screws①.
2. Remove the lens②.
3. Remove bulb and replace it with recommended bulb.
4. Test the taillight/ brakelight to see that it's working .
5. Reinstall the lens and screws.

High Beam Headlight Adjustment

The headlight beam can be adjusted up and down.

1. Place the vehicle on a level surface with the headlight approximately 10''(3m) from a wall.
2. Measure the distance from the floor to the center of the headlight and make a mark on the wall at the same height.
3. Start the engine and turn the headlight switch to high beam.
4. Observe headlight aim. The most intense part of the headlight beam should be aimed 2.8'' (71mm) below the mark placed on the wall in step 2. **NOTE :** Driving weight must be included on the seat.
5. To turn the two adjusting screws ③ clockwise is to lower the beam area and
   to turn the two adjusting screws ③ counterclockwise is to heighten the beam area.

12. TROUBLESHOOTING

NOTE:

The following troubleshooting does not cover all the possible causes of trouble. It should be helpful, however, as a guide to troubleshooting. Refer to the relative procedure in this manual for inspection, adjustment and replacement of parts. Adjustment and replacement must be done by your dealer.

STARTING FAILURE

(Lights and Meter are working properly)

• Emergency power off switch fault or not open

• cable malfunction

• Motor controller malfunction

• Motor malfunction

• Accelerator pedal failure or no return

•Electronic gear shift fault

(Lights and Meter are not working)

•Main switch malfunction

•Burnt out, improper connection

• cable malfunction

POOR MEDIUM AND HIGH SPEED PERFORMANCE

• Accelerator pedal output signal is not accurate

• Battery power shortage or battery malfunction

• Motor malfunction

• Motor malfunction

• Motor controller malfunction

12. TROUBLESHOOTING

• Poor contact of electronic gear

•Parking handle not released

POOR CHARGING PERFORMANCE

•Charging indicator lamp malfunction

• Car charger malfunction

• Charging plug and socket malfunction

• Battery connection is not reliable

•Battery malfunction

•Gearbox malfunction

POOR BRAKING EFFECT

•Worn front hub bearing

•Worn brake pad

•Worn brake disc

•Air in brake fluid

•Leaking brake fluid

•Faulty master cylinder kit

•Faulty caliper seal kit

•Loose union bolt

•Broken brake hose

•Oily or greasy brake pad

•Oily or greasy brake disc

13 SPECIFICATION

Dimensions & Capacities		
L X W X H	3092×1481×1941 mm	121.7×58.3×76.4in
Seat height	815mm	32 in
Wheel Base	1620mm	63.7 in
Ground Clearance	260mm	10.2 in
Battery capacity	72V 140Ah	72V 140Ah
Battery quantity	6	6
Actual mass:	735kg	1395lb
Cargo Bed Maximum load limit	200kg	441 lb
Tongue Weight	11 kg	24 lb
Tow Capacity	200 kg	450 lb
Drive System		
Drive System	Shaft drive	
Front Tire	24×8-12	
Rear Tire	24×8-12	
Tire Pressure(front)	250 kPa	36.26PSI
Tire Pressure(rear)	250 kPa	36.26PSI
Brake System		
Brake	Front Brake	Dual Hydraulic Disc / Front and rear unified
	Rear Brake	
	Operation	Foot
Parking Brake	Mechanical Disc	
Suspension		
Front	MacPherson Strut	
Rear	Swing Arm	
shock absorber	Coil spring/oil damper	

MOTOR	
Motor Type	PMSM
Rated voltage	DC 72

13 SPECIFICATION

Power	7.5KW
Rated speed	3000rpm
Rated torque	23.9N.m
Holzer sensor number	3

Electrical Equipment			
Battery		72V 140Ah	
Emergency power off switch		250A	
DC-DC Converter		72V-13.5V 500w	
Brake/ Tail Light		21W/5W x2	
High Beam Indicator Light		12V 1W	
Reverse Indicator Light		12V 1W	
Turn Light (Europe Only)		12V 10W X4	
Turn Indicator Light (Europe Only)		12V 1W	
Front Position Light		12V 5W x2	
Register Plate Light (Europe Only)		12V 5W	
Specified fuses	Backup Fuse	20.0 A	On the fuse box
	Accessory Socket Fuse	10.0 A	
	Signaling/ Lighting System Fuse	20.0 A	
	Backup Fuse (1)	10.0 A	
	Backup Fuse (2)	20.0 A	
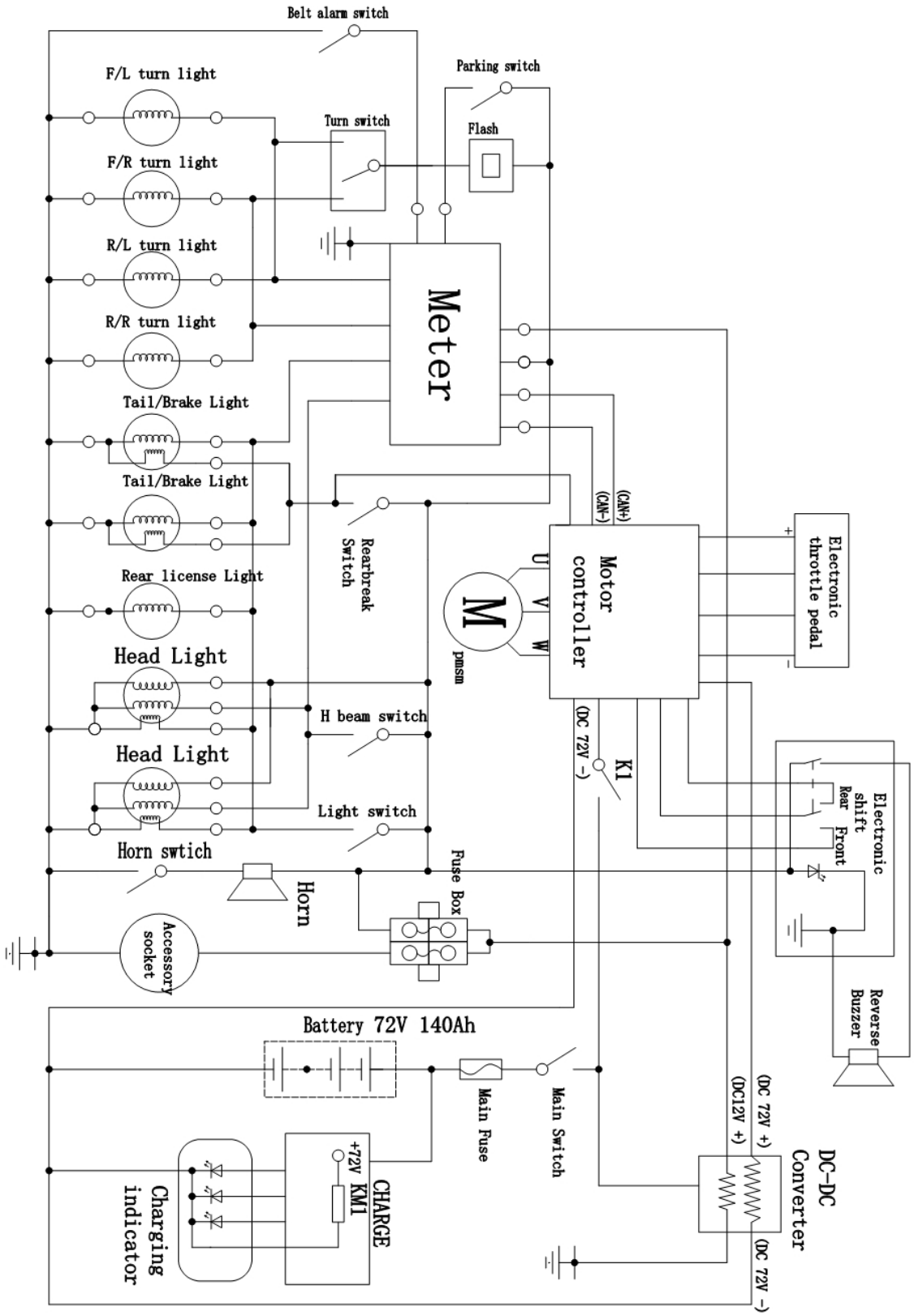
14. WIRNING DIAGRAM